

Magnetoelectric integrated multi-turn absolute encoder

BMBA35

Catalogue

1. Product Features 3
2. Naming Rule 3
3. Technical Parameter 4
4. Structural Drawings 5
5. Recommended Motor and Design Dimensions 5
6. Cable Definition 5
7. Installation Methods 6
8. Installation Steps 6
9. Installation Accessories 7
10. Specifications and Models 7
11. RS485 Protocol 8

BMMA35
Magnetoelectric integrated multi-turn absolute encoder

1. Product Features

+ Integrated structural design, simple and convenient installation and use
+ Magnetic knitting principle, no fear in the face of bad working conditions
+ 35mm integral small size design, which can adapt to various flange motors



2. Naming Rule

BMBA35	B□□	17	16	RS485	WA00	SP□□□□	□
A	B	C	D	E	F	G	H

A	**Serial model No.**			
	This product is a servo magnetoelectric integrated multi-turn absolute value encoder with an outer diameter of 35mm			
B	**Shaft type**			
	B06	Straight shaft，ϕ6mm	B08	Straight shaft，ϕ8mm
C	**Single-turn resolution**			
	17：17bit			
D	**Multi-turn resolution**			
	16：16bit			
E	**Communication interface**			
	RS485			
F	**Connection type**			
	WA00：without cable		WA0.5：Horizontal cable outlet, 0.5 m	
G	**Spring clip type**			
	SP3001/SP4002/SP5502			
H	**Other properties**			
	No special requirements; default configuration applies.			

3. Technical Parameter

Performance						
Single-turn resolution		17bit				
Multi-turn resolution		16bit				
Auxiliary function		Fault warning, battery voltage warning				
Interface						
Communication interface		RS485				
Coding direction		CCW				
Output code type		Binary code				
Baud rate		2.5Mbps				
Communication frequency		⩽ 16kHz				
Electrical parameters						
Specifications		Temperature T=25°C				
		Least value		Representative value		Crest value
Service voltage		4.75V		5V		5.25V
Current of main power supply		— —		⩽ 72mA		— —
Battery voltage		— —		3.6V DC		— —
Battery power consumption current		— —		7μA		— —
Battery fault voltage		— —		2.9V		— —
Battery pre-warning voltage		— —		3.1V		— —
Mode switching voltage	Main power conversion low power consumption mode	— —		4.2V		— —
	Low power conversion main power supply mode	— —		4.3V		— —
Differential output level	High level	3.5V		— —		— —
	Low level	— —		— —		1.7V
Along the time of change		— —		— —		100ns
Insulation resistance		50MΩ		— —		— —
Connection method		Terminal type: 8 pin (cable selection)				
Mechanical parameter						
Shaft diameter		Straight shaft				
		Φ6mm/Φ8mm				
Maximum shaft speed		⩽ 6,000rpm				
Moment of inertia		0.72kg·mm²				
Output shaft allowable deviation	Shaft type	Axial	Axial float	Radial	Radial runout	Tilt Angle
	Straight shaft	＜ 0.1mm		⩽ ±0.1mm		＜ 0.1°
Enviromental parameter						
Protection Class		Motor rear cover protection				
Operating temperature range		-10...105°C				
Relative humidity		⩽ 90% (40° C/21d, based on EN 60068-2-78); no condensation				
Vibrate		10...55 Hz, amplitude 1.5mm; 55...2000Hz, acceleration 98m/s²; XYZ in three directions, 2 hours each, for a total of 6 hours.				
Mechanical shock		Impact acceleration: 980 m/s², 11 ms; 3 times per direction, totaling 18 times				
Electromagnetic compatibility		IEC61800-3				

4. Structural Drawings

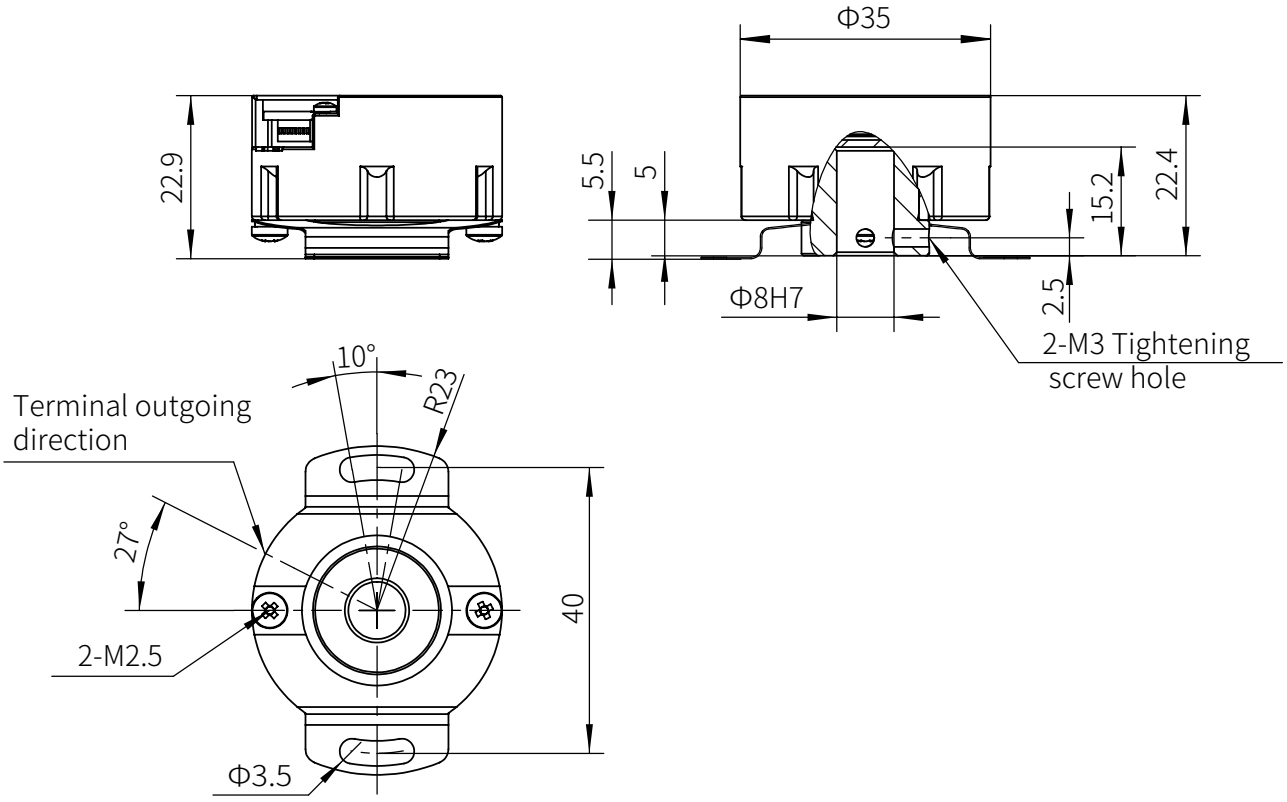

Spring clip component drawings	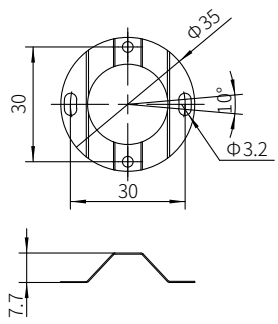	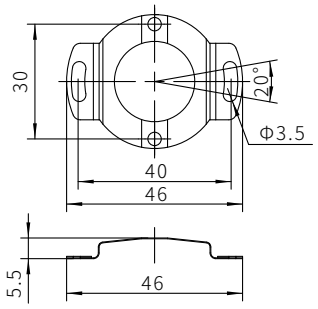	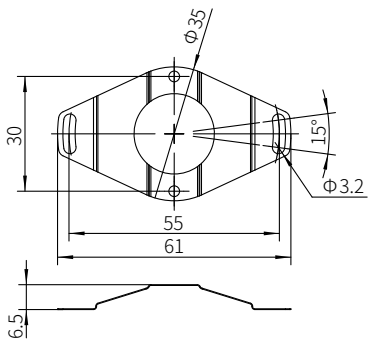
NO.	SP3001	SP4002	SP5502

5. Recommended Motor Terminal Design Dimensions

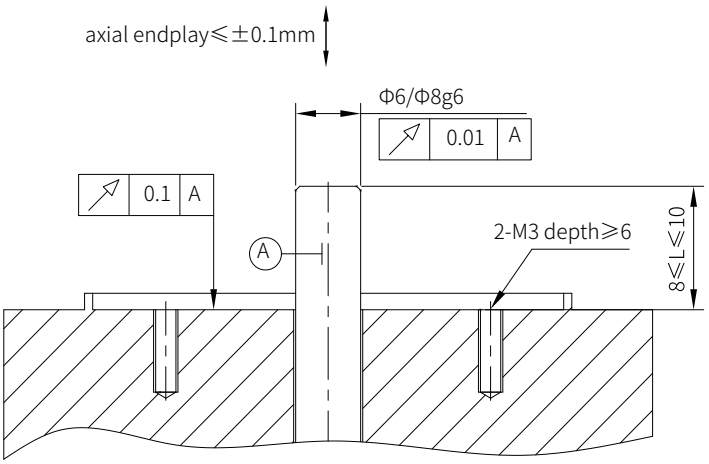

6. Cable Definition

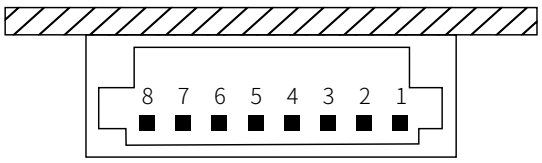

NO.	1	2	3	4	5	6	7	8
RS485 definition	+5V	GND	RS485 +	RS485 -	Battery +	Battery -	NC	PE
Color	Red	Black	Blue	Yellow	Brown	White	/	Block

7. Installation Methods

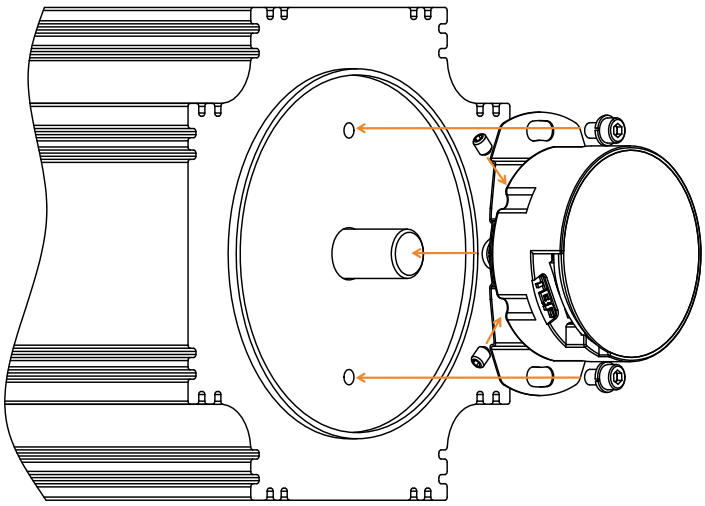

Use tools: SW1.5 hexagon wrench, SW2.5 hexagon wrench.

Installation diagram

8. Installation Steps

1. Integral installation of encoder: pass the encoder on the motor shaft to ensure that the bottom surface of the elastic mounting piece is attached to the rear end surface of the motor. When installing, check whether the encoder can penetrate smoothly. If it is blocked, check the tolerance of motor shaft diameter and observe whether the shaft surface is deformed or crushed. Do not press the encoder hard during installation, and do not knock or press the encoder circuit board.

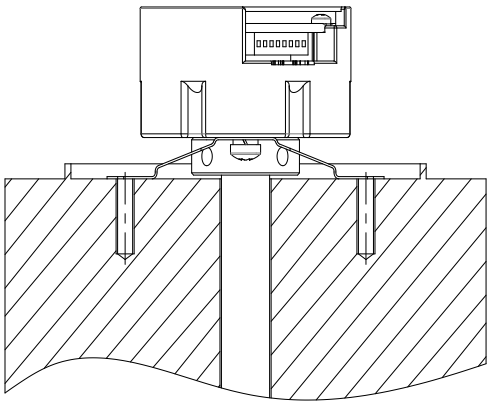

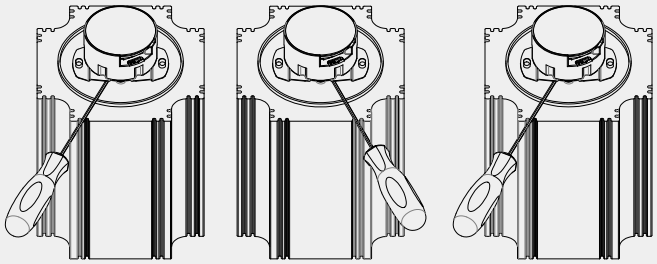

2. Fixing the set screw of the encoder hollow shaft: apply thread glue to the head of M3×4 set screw, screw the first set screw into the encoder shaft with SW1.5 Allen wrench to make the set screw contact with the motor shaft (not locked at this time), screw the second set screw into the encoder shaft with thread glue, and lock it with 7 kg FCM torque; Then lock the first set screw with 7 kg FCM torque.

3. Fix the elastic mounting piece: lightly lock the first M3 hexagon socket head combination screw with SW2.5 hexagon socket head torque wrench; Then the second M3 hexagon socket head combination screw on the other side is locked with a torque of 8 ~ 10 kg FCM; Then the first M3 hexagon socket head combination screw is locked with 8 ~ 10 kg FCM torque.

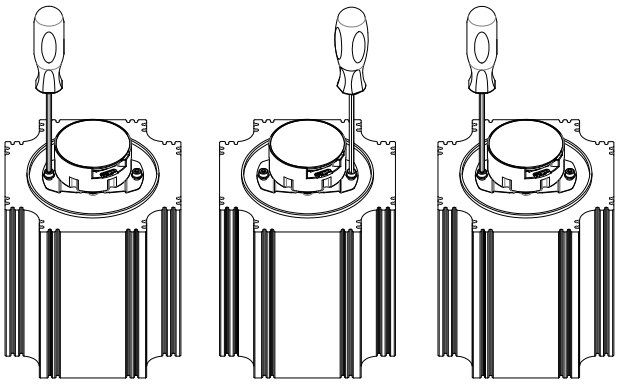

9. Installation Accessories

Installation accessories	Description
M3 x 4 set screw x 2	Included in attachments
M3 x 10 combined screw x 2	Included in attachments

10. Specifications and Models

Specification model	Description	Optional accessories
BMBA35-B06-17-16-RS485-WA0.5-SP3001	Straight shaft 6mm，Single-turn 17bit，Multi-turn16bit	Spring clip, Cables
BMBA35-B08-17-16-RS485-WA0.5-SP3001	Straight shaft 8mm，Single-turn 17bit，Multi-turn16bit	Spring clip, Cables

RS485 Protocol

1. Summary

Unit	Description	Remarks
Communication code system	Binary system	--
Communication circuit	Differential drive	RS485
Data transmission content	Single-turn position information	17-bit (supports up to 23-bit)
	Multi-turn position information	16bit
Communication rate	2.5Mbps	

2. E^2PROM Communication specification

Unit	Address	Description	Remarks
Readable user parameter address range	0~0x7E*page 8	User parameter field	This address field can be used to store user parameters, and some areas on page 8 are reserved and are not recommended for customers
Page address	0x7F	0...7	Do not exceed this range
Maximum erasable times	100000 times		The number of times the operation can be executed

3. Frame format

Each data frame consists of several data words. Each data word is transmitted and received using one start bit, eight data bits, and one stop bit. Bits are transmitted least significant bit (LSB) first and most significant bit (MSB) last.

Unit	Description	Remarks
CF	Control Field	Identifies different command types
SF	Status Field	Indicates the encoder status
DF	Data Field	Encoder position data
ADF	Address Field	Accessible encoder address
EDF	E^2PROM Field	The content of the address
CRC	CRC verify	CRC polynomial:x^8+1 . All data bytes except the CRC are XORed

CF category	Diagrammatic presentation
Read position data	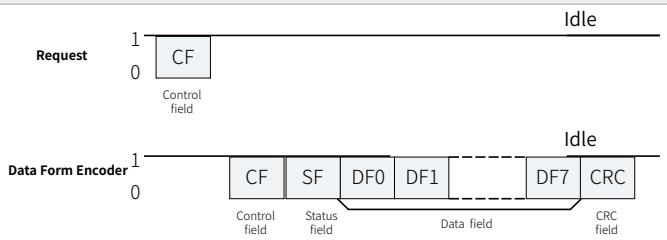 *** The data number of DF depends on different CF.**
Write to E²PROM	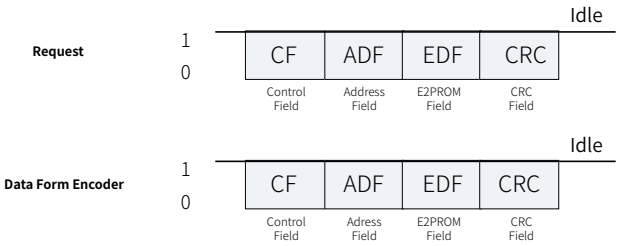 ***The request frame has the same content as the return frame.**
Read from E²PROM	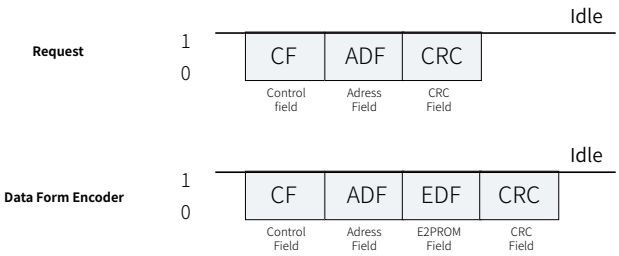 ***The content of the accessed address is added in the return frame.**

4. Detailed Description

4.1 Control field（CF）

CF consists of one data word, and its categories and contents are shown in the following table:

CF category	CF type	Remarks
Read data	ID0(0x02)	Read absolute position data (CF+SF+ABS+CRC)
	ID1(0x8A)	Read multi-turn data (CF+SF+ABM+CRC)
	ID2(0x92)	Read encoder ID information (CF+SF+ENID+CRC)
	ID3(0x1A)	Read all data（CF+SF+ABS+ENID+ABM+ALMC+CRC）
Write to E²PROM	ID6(0x32)	8-bit user data can be written to the specified address. Within 20 μs after the command has been transmitted in the specified format, the encoder sends a response. Do not communicate with the encoder during this period
Read from E²PROM	IDD(0xEA)	8-bit user data can be read from the specified address. Within 20 μs after the command has been transmitted in the specified format, the encoder sends a response. Do not communicate with the encoder during this period
Reset	ID7(0xBA)	The reset instruction is sent for 10 consecutive times at a time interval of not less than 62.5μs to reset all the fault flags.
	ID8(0xC2)	The reset command is sent for 10 consecutive times at a time interval of not less than 62.5μs to reset any single lap position to zero. Even if it is powered on again, the position still keeps the reset position data.
	ID8(0x62)	The reset instruction is sent for 10 consecutive times at a time interval of not less than 62.5μs, which will reset the multi-turn data to zero (without affecting the single-turn data). At the same time, all the fault flag bits are reset.

4.2 Status field（SF）

SF consists of 1 byte, and the definition of each bit is shown in the following table:

Bit domain	Definition	Description
Bit0	Rsvd	“0”
Bit1	Rsvd	“0”
Bit2	Rsvd	“0”
Bit3	Rsvd	“0”
Bit4	Counting Error	Same as ALMC.Bit2
Bit5	Xor Multi Error	Equivalent to the OR of ALMC.Bit5, Bit6, and Bit7
Bit6	Rsvd	“0”
Bit7	Rsvd	“0”

4.3 Data field (DF0~DF7)

According to different CF types, there are different bytes in DF, as shown in the following table:

CF type	DF0	DF1	DF2	DF3	DF4	DF5	DF6	DF7
ID0（0x02）	ABS0	ABS1	ABS2					
ID1（0x8A）	ABM0	ABM1	ABM2					
ID2（0x92）	ENID							
ID3（0x1A）	ABS0	ABS1	ABS2	ENID	ABM0	ABM1	ABM2	ALMC
ID7（0xBA）	ABS0	ABS1	ABS2					
ID8（0xC2）	ABS0	ABS1	ABS2					
IDC（0x62）	ABS0	ABS1	ABS2					

Remarks:

（1）ABS 0~ABS2 are the low, middle and high bits of the absolute position of the encoder, respectively, in which the high 7 bits of ABS2 are 0, and other data constitute 17-bit position information (for a 23-bit encoder, the high 17bit of ABS 2 is 0, and the rest are valid bits).

（2）ABM0~ABM2 are the low, middle and high positions of the encoder's multi-turn positions, where ABM2 is 0, and other data constitute 16bits multi-turn position information.

（3）ENID is the encoder ID information with the value of 0x11 (17bit) or 0x17 (23bit).

（4）ALMC is the encoder fault flag bit, see the fault description for details.

4.4 Fault description

ALMC faults are listed in the following table:

Bit	0	1	2	3	4	5	6	7
Definition	Over-speed	“0”	Counting Error	“0”	“0”	Multi-turn Error	Battery Error	Battery Alarm

The descriptions of individual fault flags are provided in the following table:

Fault name	Description	Corrective Action
Over-speed	In 5 V power supply mode, the rotational speed exceeds 7,200 rpm	Power-cycle the encoder
Counting Error	Single-turn position calculation error	Power-cycle the encoder
Multi-turn Error	Multi-turn data loss or multi-turn counting error	Reset the fault
Battery Error	The battery voltage falls below 2.9 V, triggering the fault flag	Check the battery power supply circuit and replace the battery
Battery Alarm	The battery voltage falls below 3.1 V, triggering the alarm flag	Replace the battery with one of normal voltage. The alarm will clear automatically

5. Time sequence description

5.1 Sequence chart

Category	Sequence chart
Power-on Timing Chart	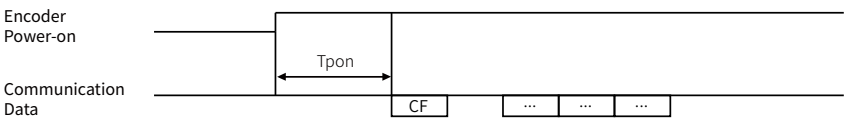
CF Communication Timing Chart	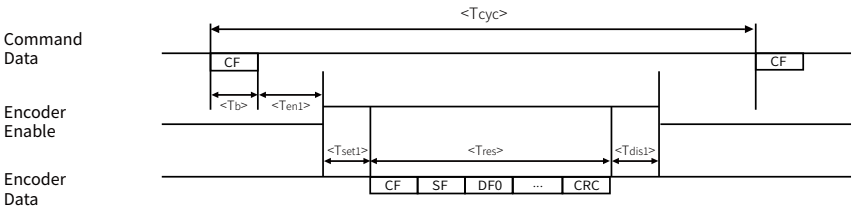
EEPROM Communication Timing Chart	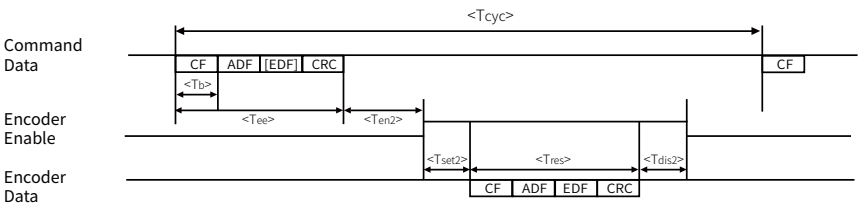

5.2 Detailed index

Characteristic	Symbol	Minimum	Default	Maximum	Unit	Note
Power-on time	Tpon		450	550	ms	
Command cycle period	Tcyc	62.5			μs	
Data byte time	Tb		4		μs	
Encoder enable delay time	Ten1	1.5		3.5	μs	
	Ten2		4.5		μs	
Encoder EEPROM Command time	Tee		12		μs	Read:3 bytes data
			16		μs	Write:4 bytes data
Encoder response time	Tres		4*N		μs	N bytes data
Encoder data set-up delay time	Test1	0.8		2	μs	
	Test2	1		1.5	μs	
Encoder disable delay time	Tdis1	0.6		1.2	μs	
	Tdis2		1.3		μs	

Felix-Wankel-Str.1, 85221 Dachau, Germany

Tel: +49 (0) 8131 337578-0
E-mail: info@tbfsensor.de

TBF Electronic Technology GmbH (German branch)

Building 6, Dazu Enterprise Bay,
8th yard of Liangshuihe 2nd street, BDA P.R.China

Tel: +86 10-67948976 67948916
Fax: +86 10-67948979

Beijing Tebeifu Electronic Technology Co., Ltd.

www.tbfsensor.com

For more customizable products, please contact us.