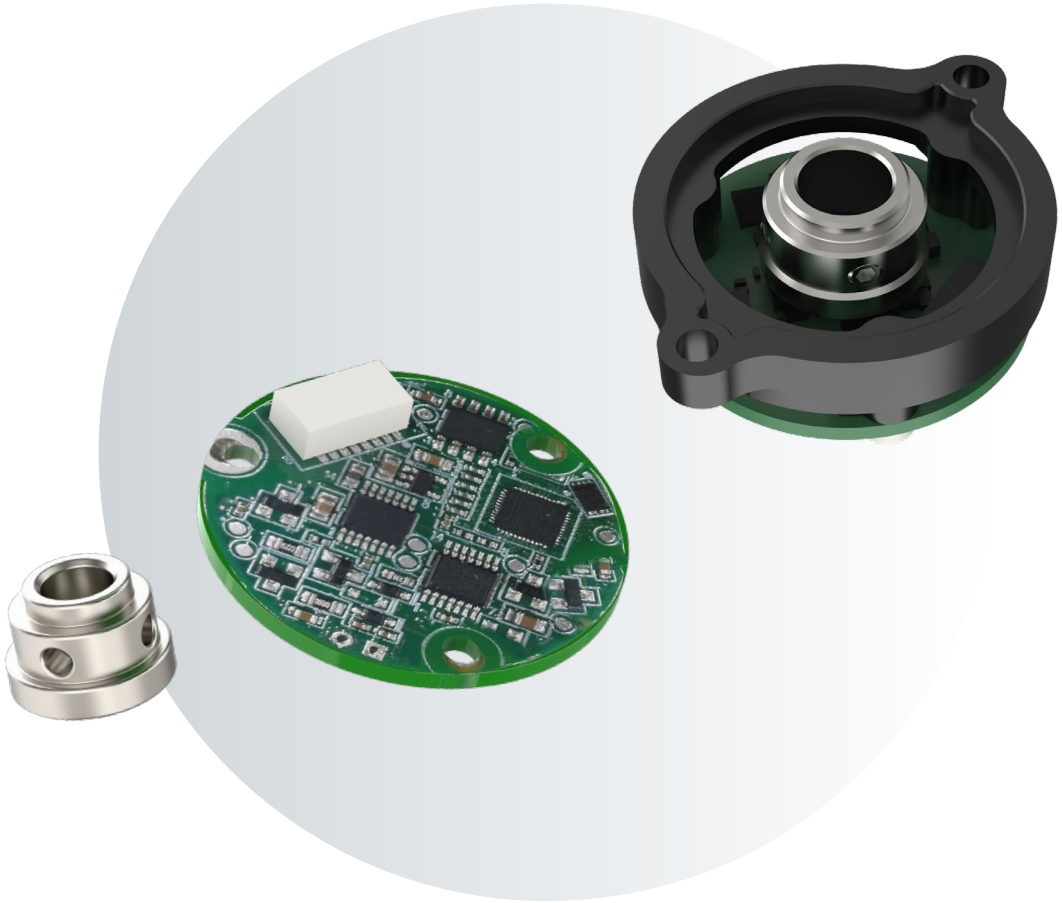

# Magnetoelectric split-type multi-turn absolute encoder

# BMBAS34-A/B/C

# Catalogue

1. Product Features 3
2. Naming Rule 3
3. Technical Parameter 4
4. Structural Drawings 5
5. Recommended Motor and Design Dimensions 5
6. Cable Definition 5
7. Installation Methods 6
8. Installation Steps 6
9. Installation Accessories 7
10. Specifications and Models 7
11. RS485 Protocol 8

# BMBAS34 A/B/C
# Magnetoelectric split-type multi-turn absolute encoder

## 1. Product Features

+ Compatible with motors featuring different shaft sizes
+ Easy installation with lower installation and operating costs
+ One-click commissioning for time and effort savings

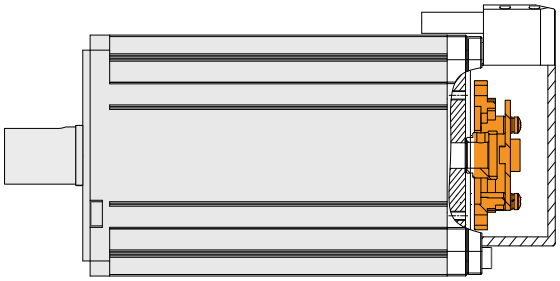

## 2. Naming Rule

| B | M | B | A | S | 3 | 4 | | B | | | 1 | 7 | 1 | 6 | R | S | 4 | 8 | 5 | N | P | W | A | 0 | 0 | |
|---|---|---|---|---|---|---|---|---|---|---|---|---|---|---|---|---|---|---|---|---|---|---|---|---|---|---|
| A | | | | | | | B | C | | | D | | E | | F | | | | | G | | H | | | | | I |

| | | | | | | | |
|---|---|---|---|---|---|---|---|
| **A** | **Serial model No.** | | | | | | |
| | This product is a servo magnetoelectric split multi-turn absolute value encoder with an outer diameter of 34mm | | | | | | |
| **B** | **Base type** | | | | | | |
| | A：Type A | | B：Type B | | C：Type C | | No：No base |
| **C** | **Shaft type** | | | | | | |
| | B06 | Straight shaft，ϕ6mm | B08 | Straight shaft，ϕ8mm | B00 | No magnetic head | |
| **D** | **Single-turn resolution** | | | | | | |
| | 17：17bit | | 19：19bit | | 20：20bit | | |
| **E** | **Multi-turn resolution** | | | | | | |
| | 16：16bit | | | | | | |
| **F** | **Communication interface** | | | | | | |
| | RS485 | | | | | | |
| **G** | **Output accuracy** | | | | | | |
| | NP：Standard precision | | HP：High-precision | | | | |
| **H** | **Connection type** | | | | | | |
| | WA00：without cable | | WA0.5：Horizontal cable outlet, 0.5 m | | | | |
| **I** | **Other properties** | | | | | | |
| | 1.No special requirements; default configuration applies. | | | | | | |

## 3. Technical Parameter

| | | | | | | |
|---|---|---|---|---|---|---|
| **Performance** | | | | | | |
| Single-turn resolution | | 17bit/19bit/20bit | | | | |
| Multi-turn resolution | | 16bit | | | | |
| Auxiliary function | | Fault warning, battery voltage warning | | | | |
| **Interface** | | | | | | |
| Communication interface | | RS485 | | | | |
| Coding direction | | CCW | | | | |
| Output code type | | Binary code | | | | |
| Baud rate | | 2.5Mbps | | | | |
| Communication frequency | | ⩽ 16kHz | | | | |
| **Electrical parameters** | | | | | | |
| Specifications | | Temperature T=25°C | | | | |
| | | Least value | | Representative value | | Crest value |
| Service voltage | | 4.75V | | 5V | | 5.25V |
| Current of main power supply | | — — | | ⩽ 72mA | | — — |
| Battery voltage | | — — | | 3.6V DC | | — — |
| Battery power consumption current | | — — | | 7μA | | — — |
| Battery fault voltage | | — — | | 2.9V | | — — |
| Battery pre-warning voltage | | — — | | 3.1V | | — — |
| Mode switching voltage | Main power conversion low power consumption mode | — — | | 4.2V | | — — |
| | Low power conversion main power supply mode | — — | | 4.3V | | — — |
| Differential output level | High level | 3.5V | | — — | | — — |
| | Low level | — — | | — — | | 1.7V |
| Along the time of change | | — — | | — — | | 100ns |
| Insulation resistance | | 50MΩ | | — — | | — — |
| Connection method | | Terminal type: 8 pin (cable selection), external PE | | | | |
| **Mechanical parameter** | | | | | | |
| Shaft diameter | | Straight shaft | | | | |
| | | Φ6mm/Φ8mm | | | | |
| Maximum shaft speed | | ⩽ 6,000rpm | | | | |
| Moment of inertia | | 0.23kg·mm² | | | | |
| Output shaft allowable deviation | shaft type | Axial | Axial float | Radial | Radial runout | Tilt Angle |
| | Straight shaft | ＜ 0.2mm | | ⩽ ±0.1mm | | ＜ 0.2° |
| **Enviromental parameter** | | | | | | |
| Protection Class | | Motor rear cover protection | | | | |
| Operating temperature range | | -20...105°C | | | | |
| Relative humidity | | ⩽ 90% (40° C/21d, based on EN 60068-2-78); no condensation | | | | |
| Vibrate | | 10...55 Hz, amplitude 1.5mm;<br>55...2000Hz, acceleration 98m/s²;<br>XYZ in three directions, 2 hours each, for a total of 6 hours. | | | | |
| Mechanical shock | | Impact acceleration: 980 m/s², 11 ms; 3 times per direction, totaling 18 times | | | | |
| Electromagnetic compatibility | | IEC61800-3 | | | | |

## 4. Structural Drawings

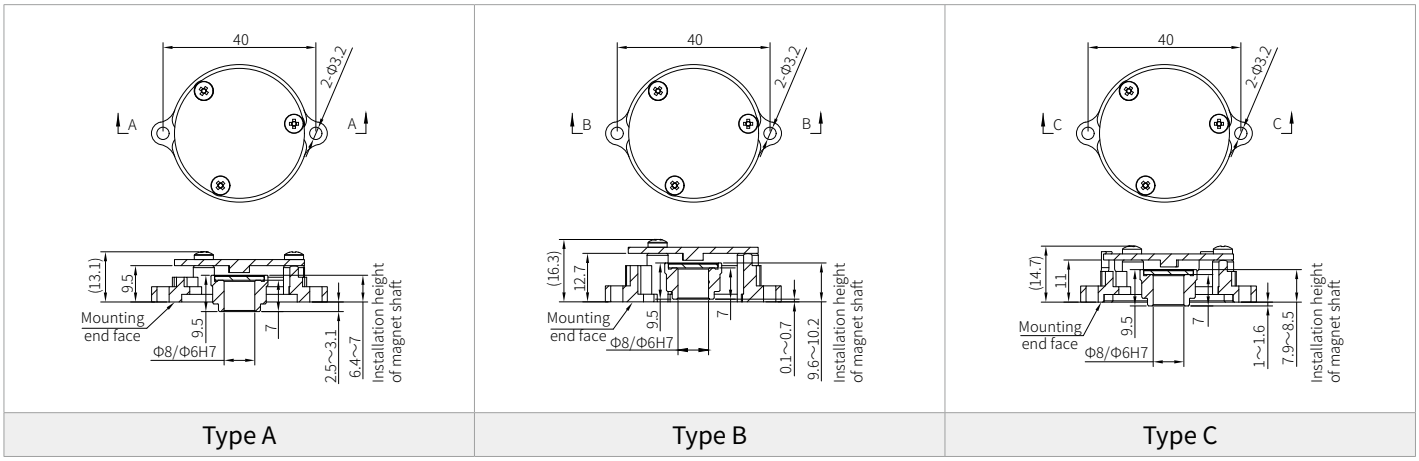


| Type A | Type B | Type C |
|---|---|---|

## 5. Recommended Motor and Design Dimensions

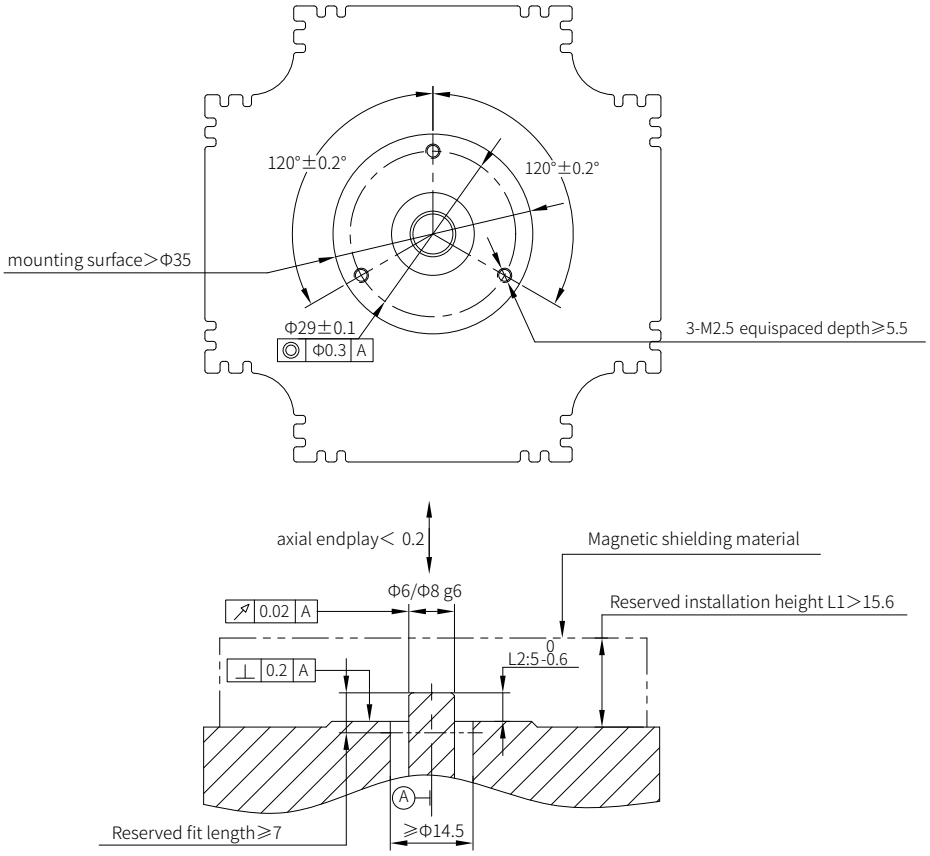


A base: L1 > 17 L2:4.5
B base: L1 > 20.5 L2:8
C base: L1 > 18.5 L2:6

## 6. Cable Definition

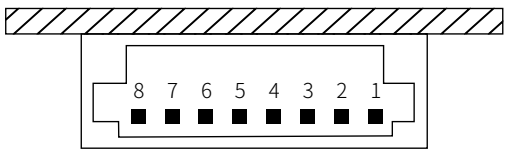


| NO. | 1 | 2 | 3 | 4 | 5 | 6 | 7 | 8 |
|---|---|---|---|---|---|---|---|---|
| RS485 definition | +5V | GND | RS485 + | RS485 - | Battery+ | Battery- | NC | PE |
| Color | Red | Black | Blue | Yellow | Brown | White | / | Block |

## 7. Installation Methods

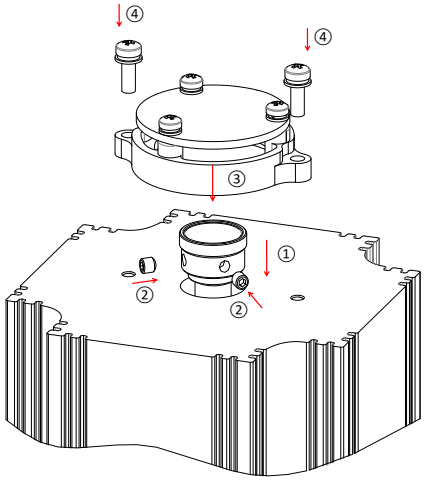


**Use tools: SW1.5 hexagon torque wrench and cross torque wrench**

**Schematic diagram of installation with base**

## 8. Installation Steps

1. Installation of magnet rotating shaft: install the magnet rotating shaft into the installation jig, and use the installation jig to insert the hollow shaft part into the motor shaft, so that the end face of the jig is attached to the end face of the motor (If no jig is needed, just ensure that the distance between the end face of the magnet rotating shaft and the mounting surface is within the recommended size range).

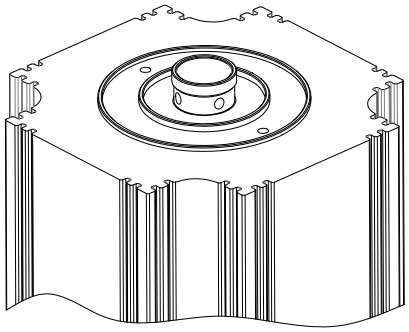

2. Fixing the set screw: according to the recommended installation size in the dimension drawing, screw the thread glue on the head of M3×3 set screw, screw the first set screw into the encoder shaft with SW1.5 Allen wrench to make it contact with the motor shaft (not locked at this time), screw the second set screw into the encoder shaft with the thread glue, and lock it with the torque of 7 kg FCM; Then lock the first set screw with 7 kg FCM torque.

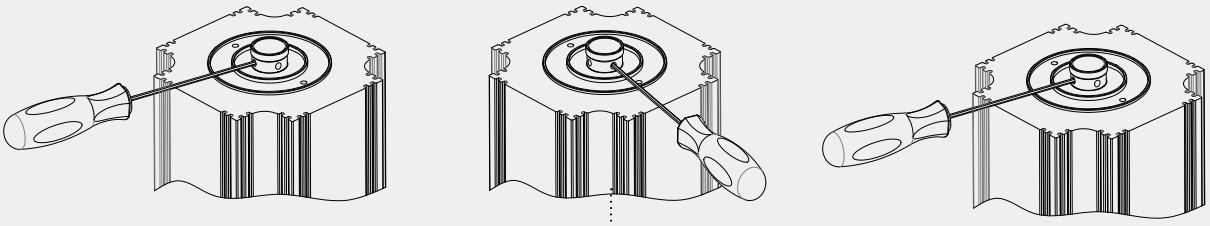

3. Installation of encoder body: put the encoder body on the installation surface, so that the end face of the base is attached to the installation surface, and the installation threaded holes are aligned. Note that the outlet direction of the connecting terminal is determined according to the direction suitable for wiring. It is forbidden to tap or press the encoder circuit board.

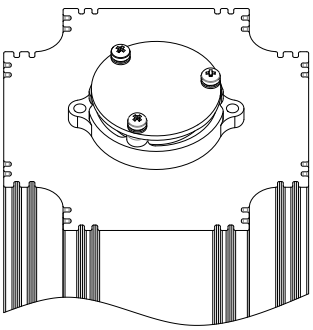

4. Fixing the encoder body: glue the heads of two M3 combination screws into the mounting holes of the base of the encoder body (note here: if the terminal needs external grounding, the screws should be inserted into the mounting holes of the base first), and then lightly lock the first M3 combination screw with a cross torque wrench; Then the second M3 combination screw on the other side is locked with a torque of 8 ~ 10 kg FCM; Then the first M3 combination screw is locked with a torque of 8 ~ 10 kg FCM.

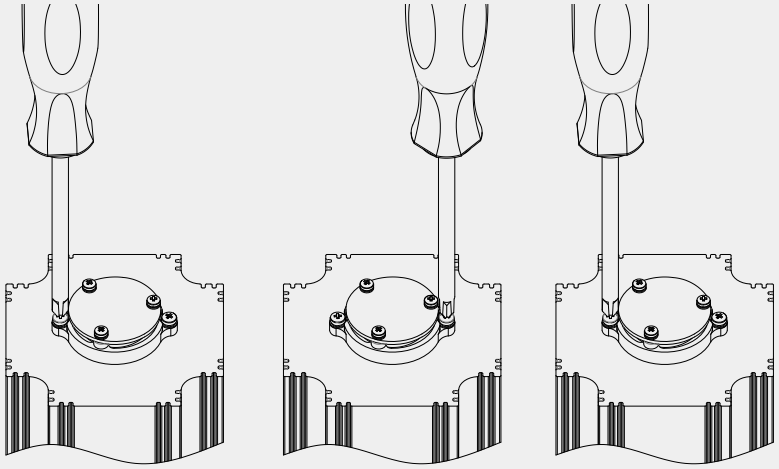

## 9. Installation Accessories

| Installation accessories | Description |
|---|---|
| M3 x 3 set screw x 2 | Included in attachments |
| M3 x 10  combined screw x 2 | Included in attachments |

## 10. Specifications and Models

| Specification model | Description | Optional accessories |
|---|---|---|
| BMBAS34-A-B06-17-16-RS485-NP-WA00 | A base, Straight shaft ϕ6mm, Single circle 17bit, Multi-circle 16bit | Cables |
| BMBAS34-B-B06-17-16-RS485-NP-WA00 | B base, Straight shaft ϕ6mm, Single circle 17bit, Multi-circle 16bit | Cables |
| BMBAS34-C-B06-17-16-RS485-NP-WA00 | C base, Straight shaft ϕ6mm, Single circle 17bit, Multi-circle 16bit | Cables |
| BMBAS34-A-B08-17-16-RS485-NP-WA00 | A base, Straight shaft ϕ8mm, Single circle 17bit, Multi-circle 16bit | Cables |
| BMBAS34-B-B08-17-16-RS485-NP-WA00 | B base, Straight shaft ϕ8mm, Single circle 17bit, Multi-circle 16bit | Cables |
| BMBAS34-C-B08-17-16-RS485-NP-WA00 | C base, Straight shaft ϕ8mm, Single circle 17bit, Multi-circle 16bit | Cables |

# RS485 Protocol

## 1. Summary

| Unit | Description | Remarks |
|---|---|---|
| Communication code system | Binary system | -- |
| Communication circuit | Differential drive | RS485 |
| Data transmission content | Single-turn position information | 17-bit (supports up to 23-bit) |
| | Multi-turn position information | 16bit |
| Communication rate | 2.5Mbps | |

## 2. E²PROM Communication specification

| Unit | Address | Description | Remarks |
|---|---|---|---|
| Readable user parameter address range | 0~0x7E*page 8 | User parameter field | This address field can be used to store user parameters, and some areas on page 8 are reserved and are not recommended for customers |
| Page address | 0x7F | 0...7 | Do not exceed this range |
| Maximum erasable times | 100000 times | | The number of times the operation can be executed |

## 3. Frame format

Each data frame consists of several data words. Each data word is transmitted and received using one start bit, eight data bits, and one stop bit. Bits are transmitted least significant bit (LSB) first and most significant bit (MSB) last.

| Unit | Description | Remarks |
|---|---|---|
| CF | Control Field | Identifies different command types |
| SF | Status Field | Indicates the encoder status |
| DF | Data Field | Encoder position data |
| ADF | Address Field | Accessible encoder address |
| EDF | E²PROM Field | The content of the address |
| CRC | CRC verify | CRC polynomial:$x^8$+1 . All data bytes except the CRC are XORed |

| CF category | Diagrammatic presentation |
|---|---|
| Read position data | 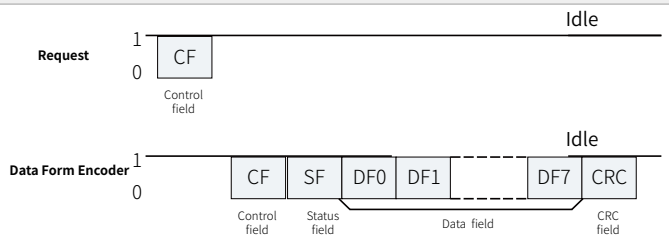 *** The data number of DF depends on different CF.** |
| Write to E²PROM | 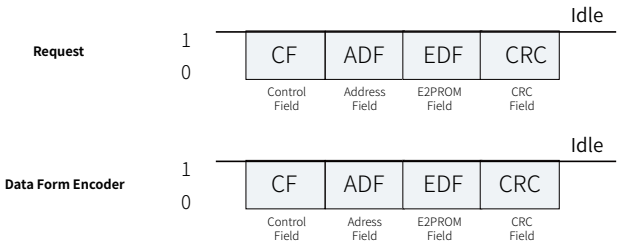 ***The request frame has the same content as the return frame.** |
| Read from E²PROM | 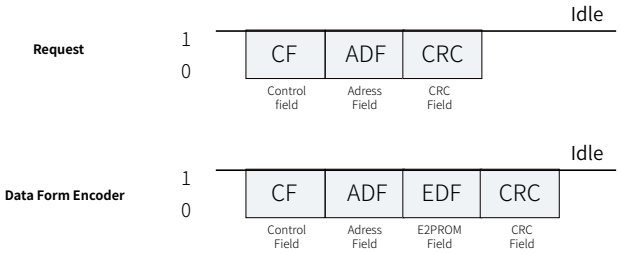 ***The content of the accessed address is added in the return frame.** |

# 4. Detailed Description

## 4.1 Control field（CF）

CF consists of one data word, and its categories and contents are shown in the following table:

| CF category | CF type | Remarks |
|---|---|---|
| Read data | ID0(0x02) | Read absolute position data (CF+SF+ABS+CRC) |
| | ID1(0x8A) | Read multi-turn data (CF+SF+ABM+CRC) |
| | ID2(0x92) | Read encoder ID information (CF+SF+ENID+CRC) |
| | ID3(0x1A) | Read all data（CF+SF+ABS+ENID+ABM+ALMC+CRC） |
| Write to E²PROM | ID6(0x32) | 8-bit user data can be written to the specified address. Within 20 μs after the command has been transmitted in the specified format, the encoder sends a response. Do not communicate with the encoder during this period |
| Read from E²PROM | IDD(0xEA) | 8-bit user data can be read from the specified address. Within 20 μs after the command has been transmitted in the specified format, the encoder sends a response. Do not communicate with the encoder during this period |
| Reset | ID7(0xBA) | The reset instruction is sent for 10 consecutive times at a time interval of not less than 62.5μs to reset all the fault flags. |
| | ID8(0xC2) | The reset command is sent for 10 consecutive times at a time interval of not less than 62.5μs to reset any single lap position to zero. Even if it is powered on again, the position still keeps the reset position data. |
| | ID8(0x62) | The reset instruction is sent for 10 consecutive times at a time interval of not less than 62.5μs, which will reset the multi-turn data to zero (without affecting the single-turn data). At the same time, all the fault flag bits are reset. |

### 4.2 Status field（SF）

SF consists of 1 byte, and the definition of each bit is shown in the following table:

| Bit domain | Definition | Description |
|---|---|---|
| Bit0 | Rsvd | “0” |
| Bit1 | Rsvd | “0” |
| Bit2 | Rsvd | “0” |
| Bit3 | Rsvd | “0” |
| Bit4 | Counting Error | Same as ALMC.Bit2 |
| Bit5 | Xor Multi Error | Equivalent to the OR of ALMC.Bit5, Bit6, and Bit7 |
| Bit6 | Rsvd | “0” |
| Bit7 | Rsvd | “0” |

### 4.3 Data field (DF0~DF7)

According to different CF types, there are different bytes in DF, as shown in the following table:

| CF type | DF0 | DF1 | DF2 | DF3 | DF4 | DF5 | DF6 | DF7 |
|---|---|---|---|---|---|---|---|---|
| ID0（0x02） | ABS0 | ABS1 | ABS2 | | | | | |
| ID1（0x8A） | ABM0 | ABM1 | ABM2 | | | | | |
| ID2（0x92） | ENID | | | | | | | |
| ID3（0x1A） | ABS0 | ABS1 | ABS2 | ENID | ABM0 | ABM1 | ABM2 | ALMC |
| ID7（0xBA） | ABS0 | ABS1 | ABS2 | | | | | |
| ID8（0xC2） | ABS0 | ABS1 | ABS2 | | | | | |
| IDC（0x62） | ABS0 | ABS1 | ABS2 | | | | | |

**Remarks：**

（1）ABS 0~ABS2 are the low, middle and high bits of the absolute position of the encoder, respectively, in which the high 7 bits of ABS2 are 0, and other data constitute 17-bit position information (for a 23-bit encoder, the high 17bit of ABS 2 is 0, and the rest are valid bits).

（2）ABM0~ABM2 are the low, middle and high positions of the encoder's multi-turn positions, where ABM2 is 0, and other data constitute 16bits multi-turn position information.

（3）ENID is the encoder ID information with the value of 0x11 (17bit) or 0x17 (23bit).

（4）ALMC is the encoder fault flag bit, see the fault description for details.

### 4.4 Fault description

ALMC faults are listed in the following table:

| Bit | 0 | 1 | 2 | 3 | 4 | 5 | 6 | 7 |
|---|---|---|---|---|---|---|---|---|
| Definition | Over-speed | “0” | Counting Error | “0” | “0” | Multi-turn Error | Battery Error | Battery Alarm |

The descriptions of individual fault flags are provided in the following table:

| Fault name | Description | Corrective Action |
|---|---|---|
| Over-speed | In 5 V power supply mode, the rotational speed exceeds 7,200 rpm | Power-cycle the encoder |
| Counting Error | Single-turn position calculation error | Power-cycle the encoder |
| Multi-turn Error | Multi-turn data loss or multi-turn counting error | Reset the fault |
| Battery Error | The battery voltage falls below 2.9 V, triggering the fault flag | Check the battery power supply circuit and replace the battery |
| Battery Alarm | The battery voltage falls below 3.1 V, triggering the alarm flag | Replace the battery with one of normal voltage. The alarm will clear automatically |

## 5. Time sequence description

### 5.1 Sequence chart

| Category | Sequence chart |
|---|---|
| Power-on Timing Chart | 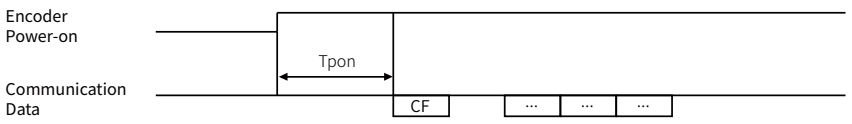 |
| CF Communication Timing Chart | 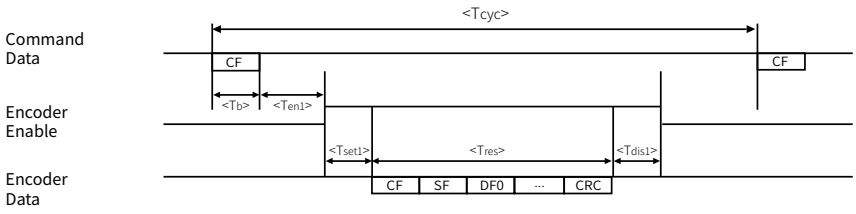 |
| EEPROM Communication Timing Chart | 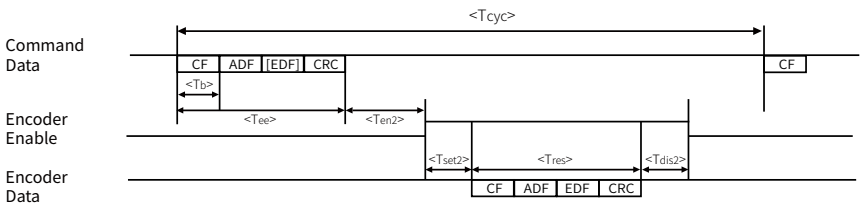 |

### 5.2 Detailed index

| Characteristic | Symbol | Minimum | Default | Maximum | Unit | Note |
|---|---|---|---|---|---|---|
| Power-on time | Tpon | | 450 | 550 | ms | |
| Command cycle period | Tcyc | 62.5 | | | μs | |
| Data byte time | Tb | | 4 | | μs | |
| Encoder enable delay time | Ten1 | 1.5 | | 3.5 | μs | |
| | Ten2 | | 4.5 | | μs | |
| Encoder EEPROM Command time | Tee | | 12 | | μs | Read:3 bytes data |
| | | | 16 | | μs | Write:4 bytes data |
| Encoder response time | Tres | | 4*N | | μs | N bytes data |
| Encoder data set-up delay time | Test1 | 0.8 | | 2 | μs | |
| | Test2 | 1 | | 1.5 | μs | |
| Encoder disable delay time | Tdis1 | 0.6 | | 1.2 | μs | |
| | Tdis2 | | 1.3 | | μs | |

Felix-Wankel-Str.1, 85221 Dachau, Germany

Tel: +49 (0) 8131 337578-0
E-mail: info@tbfsensor.de

**TBF Electronic Technology GmbH (German branch)**

Building 6, Dazu Enterprise Bay,
8th yard of Liangshuihe 2nd street, BDA P.R.China

Tel: +86 10-67948976 67948916
Fax: +86 10-67948979

**Beijing Tebeifu Electronic Technology Co., Ltd.**

www.tbfsensor.com