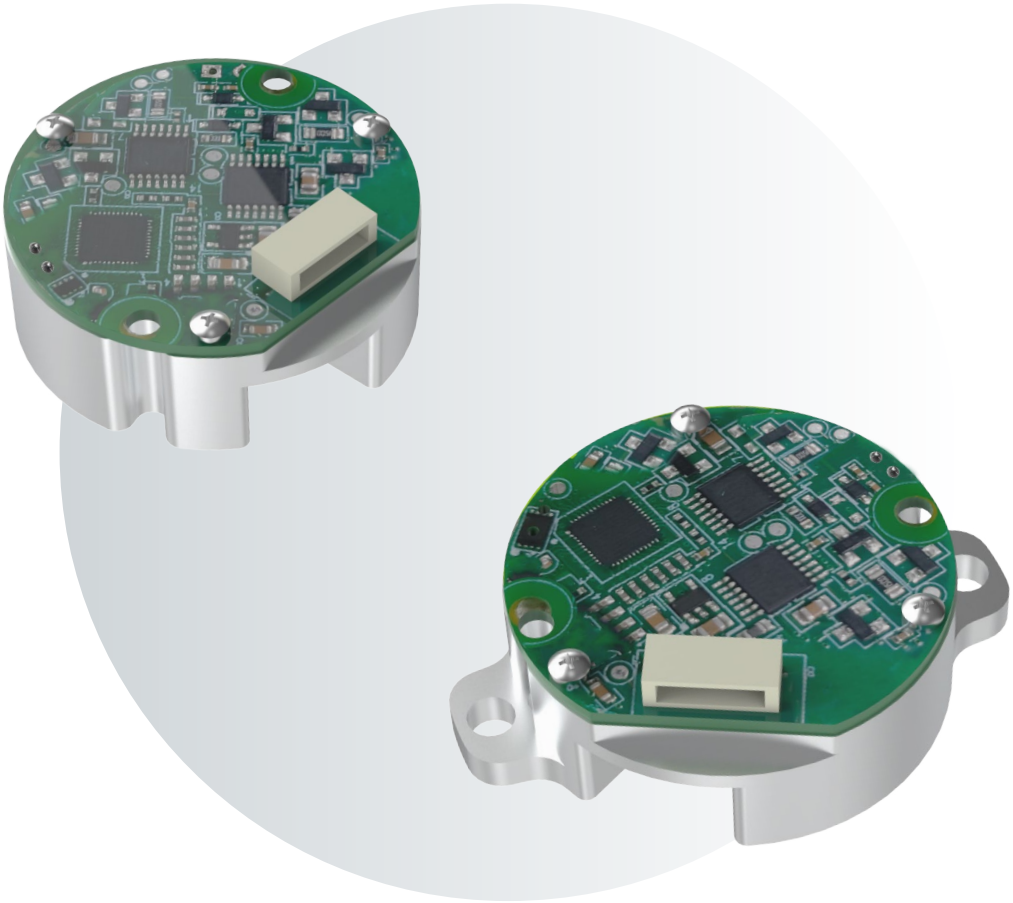

Optical integrated multi-turn absolute value encoder

BMTA35 & BMTA46

Catalogue

1. Product Features 3
2. Naming Rule 3
3. Technical Parameter 4
4. Structural Drawings 5
5. Recommended Motor Terminal Design Dimensions 5
6. Cable Definition 6
7. Installation Methods 6
8. Installation Accessories 7
9. Specifications and Models 7
10. RS485 protocol 8

BMTA35 & BMTA46

Optical integrated multi-turn absolute value encoder

1. Product Features

+ 15.5mm ultra-thin design meets the requirements of extreme space installation.
+ Special structural design, easy installation.
+ One-click debugging saves worry and time.



2. Naming Rule

B	M	T	A			B	0	6			1	6	R	S	4	8	5	W	A	0	.	5		
A				B		C			D		E		F					G						H

A	**Serial model No.**	
	Integrated absolute value Optical encoder	
B	**Measure**	
	35：The outer diameter of the product body is 35mm	46：The outer diameter of the product body is 46mm
C	**Shaft type**	
	B06	Straight shaft，ϕ6mm
D	**Single-turn resolution**	
	17：17bit	23：23bit
E	**Multi-turn resolution**	
	16：16bit	
F	**Protocol type**	
	RS485: 485 protocol	
G	**Cable exit method**	
	WA00：Without cable	WA0.5: Horizontal terminal outlet 0.5m
H	**Other properties**	
	No special requirements. Default	

3. Technical Parameter

Performance						
Single-turn resolution		17bit/23bit				
Multi-turn resolution		16bit				
Absolute positioning accuracy		Depend on that rotation accuracy of the motor shaft				
Repetitive positioning accuracy		⩽ ±5 second of arc				
Auxiliary function		Fault early warning; battery voltage early warning				
Interface						
Communication interface		RS485				
Coding direction		CCW				
Output code system		Binary system				
Baud rate		2.5Mbps				
Communication frequency		⩽ 16kHz				
Electrical parameters						
Specifications		Temperature T=25°C				
		Minimum value		Typical value		Maximum value
Supply voltage		4.75V		5V		5.25V
Main power supply consumption current		— —		60mA		— —
Battery voltage		— —		3.6V DC		— —
Battery power consumption current		— —		30μA		— —
Battery fault voltage		— —		2.9V		— —
Battery pre-warning voltage		— —		3.1V		— —
Mode switching voltage	Main power conversion low power consumption mode	— —		4.2V		— —
	Low power conversion main power supply mode	— —		4.3V		— —
Differential output level	High level	3.5V		— —		— —
	Low level	— —		— —		1.7V
Edge transition time		— —		— —		100ns
Insulance		50MΩ		— —		— —
Connection method		Terminal type: 8-pin (cable optional)				
Mechanical parameter						
Shaft diameter		Straight shaft				
		Φ6mm				
Weight		≈ 30g (Without connecting wire)				
Maximum shaft speed		⩽ 6,000rpm				
Rotor angular acceleration		⩽ 80,000 rad/s for power supply and ⩽ 4000 rad/s for battery supply.				
Moment of inertia		0.30kg·mm²				
Starting torque (20°C)		⩽ 0.005N·m				
Output shaft allowable deviation	Shaft type	Axial	Axial float	Radial	Radial runout	Tilt Angle
	Straight shaft	— —	＜ 0.1mm	±0.1mm	＜ 0.01mm	＜ 0.1°
Environmental parameter						
Protection class		Motor rear cover protection				
Operating temperature range		-20°C ...105°C				
Storage temperature range		-40°C ...125°C				
Relative humidity		⩽ 90% (40°C /21d，EN 60068-2-78)；No condensation				
Vibration		10...55 Hz, amplitude 1.5mm; 55...2000Hz, acceleration 98m/s²; XYZ in three directions, 2 hours each, for a total of 6 hours.				
Mechanical shock		Impact acceleration: 980 m/s², 11 ms; 3 times per direction, totaling 18 times				
Electromagnetic compatibility		IEC61000-4				

4. Structural Drawings

BMTA35 outline dimension drawing

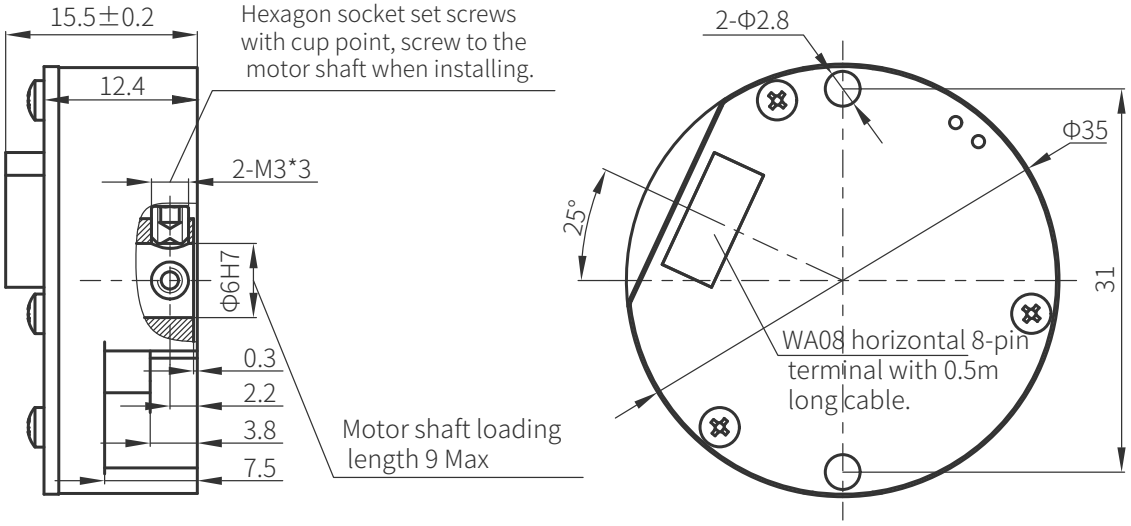

BMTA46 outline dimension drawing

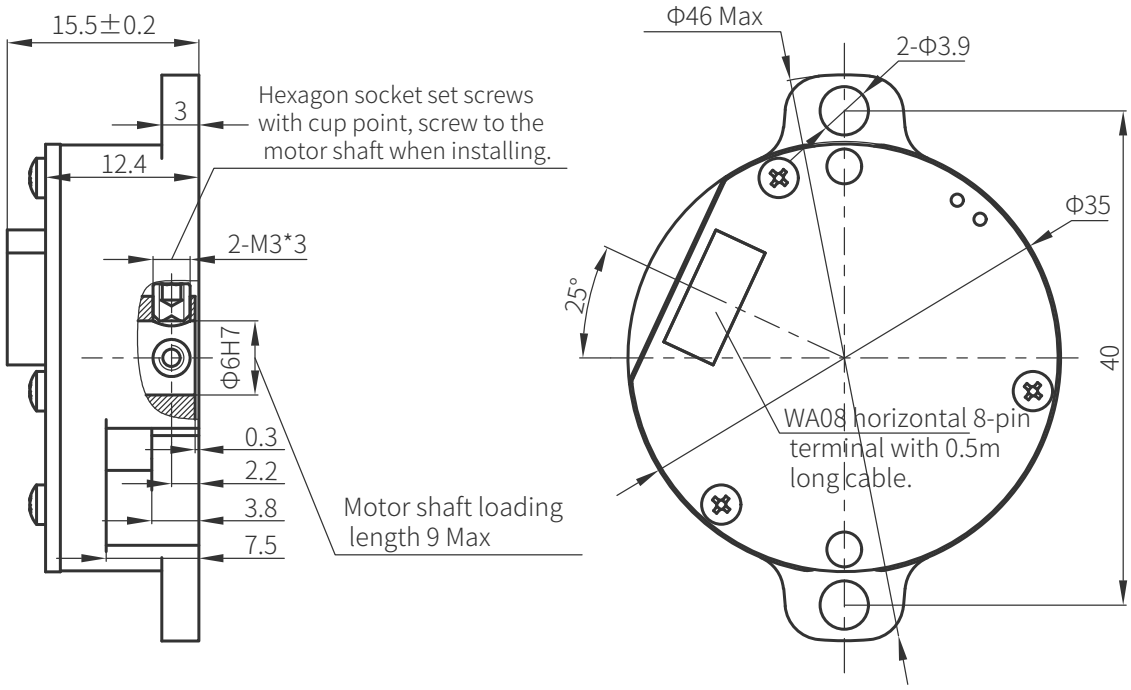

5. Recommended Motor Terminal Design Dimensions

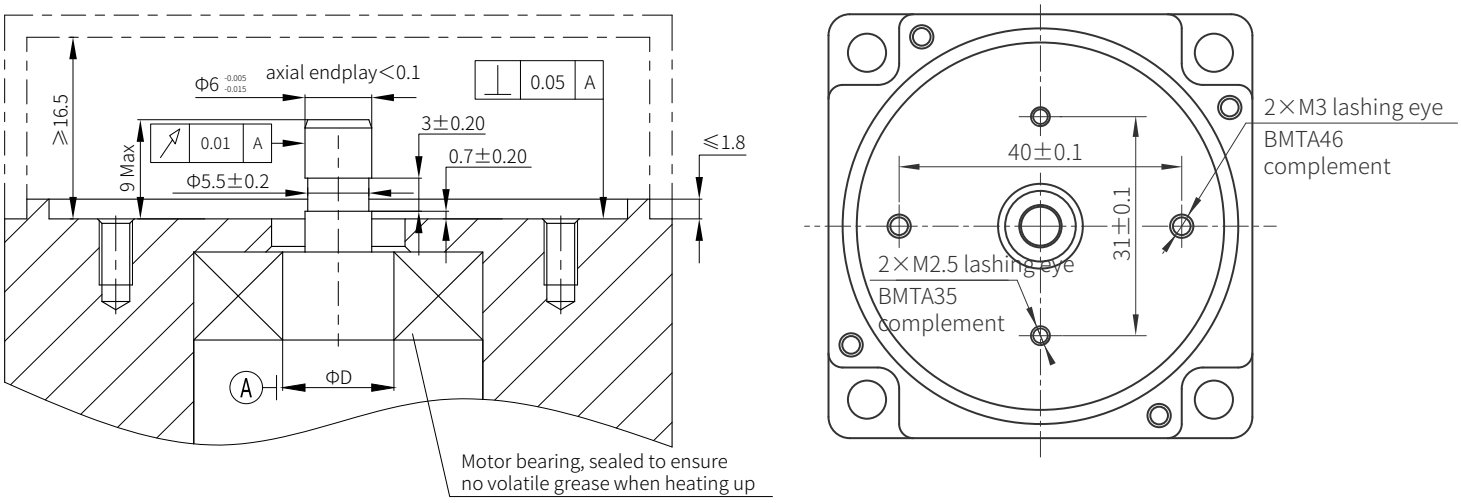

6. Cable Definition

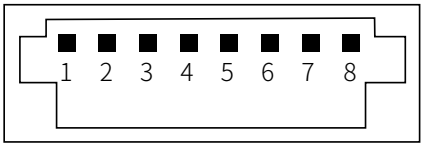

NO.	1	2	3	4	5	6	7	8
Color	Red	Black	Blue	Yellow	Brown	White	/	Block
RS485 definition	+5V	GND	RS485 +	RS485 -	Battery +	GND	/	PE

7. Installation Methods

7.1 Installation diagram

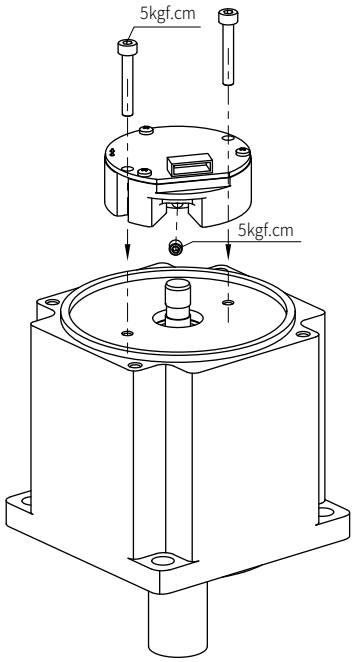

BMTA35 Series

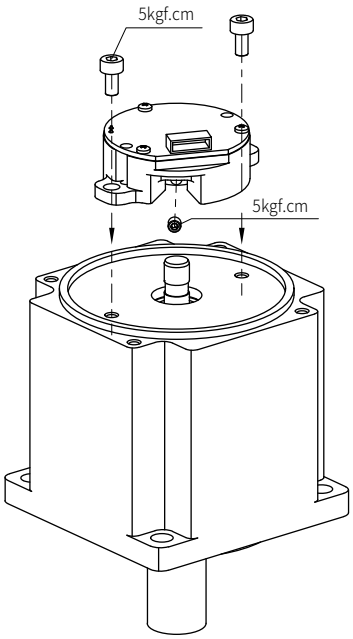

BMTA46 Series

installation tool

Metric 1.5mm hexagon wrench with opposite side

Metric 2.5mm hexagon wrench with opposite side

8. Installation Accessories

BMTA35 Installation accessories	BMTA46 Installation accessories	Description
M2.5 x 16 screw x 2	M3 x 8 socket head cap screw (Head ϕ4.5)x 2	Included in accessories
Cable	Cable	Customer selection
Metric 1.5mm hexagon wrench with opposite side	Metric 1.5mm hexagon wrench with opposite side	Customer self-configuration
Cross torque screwdriver	Metric 2.5mm hexagon wrench with opposite side	Customer self-configuration

9. Specifications and Models

Specification model	Description	Optional accessories
BMTA35-B06-17-16-RS485-WA0.5	Outside diameter 35mm ,Blind shaft ϕ6mm，single-turn17bit，multi-turn 16bit	Cables
BMTA35-B06-23-16-RS485-WA0.5	Outside diameter 35mm ,Blind shaft ϕ6mm，single-turn23bit，multi-turn 16bit	Cables
BMTA46-B06-17-16-RS485-WA0.5	Outside diameter 46mm ,Blind shaft ϕ6mm，single-turn17bit，multi-turn 16bit	Cables
BMTA46-B06-23-16-RS485-WA0.5	Outside diameter 46mm ,Blind shaft ϕ6mm，single-turn23bit，multi-turn 16bit	Cables

RS485 Protocol

1. Summary

Unit	Description	Remarks
Communication code system	Binary system	--
Communication circuit	Differential drive	RS485
Data transmission content	Single-turn position information	17-bit (supports up to 23-bit)
	Multi-turn position information	16bit
Communication rate	2.5Mbps	

2. E²PROM Communication specification

Unit	Address	Description	Remarks
Readable user parameter address range	0~0x7E*page 8	User parameter field	This address field can be used to store user parameters, and some areas on page 8 are reserved and are not recommended for customers
Page address	0x7F	0...7	Do not exceed this range
Maximum erasable times	100000 times		The number of times the operation can be executed

3. Frame format

Each data frame consists of several data words. Each data word is transmitted and received using one start bit, eight data bits, and one stop bit. Bits are transmitted least significant bit (LSB) first and most significant bit (MSB) last.

Unit	Description	Remarks
CF	Control Field	Identifies different command types
SF	Status Field	Indicates the encoder status
DF	Data Field	Encoder position data
ADF	Address Field	Accessible encoder address
EDF	E²PROM Field	The content of the address
CRC	CRC verify	CRC polynomial:x^8+1 . All data bytes except the CRC are XORed

CF category	Diagrammatic presentation
Read position data	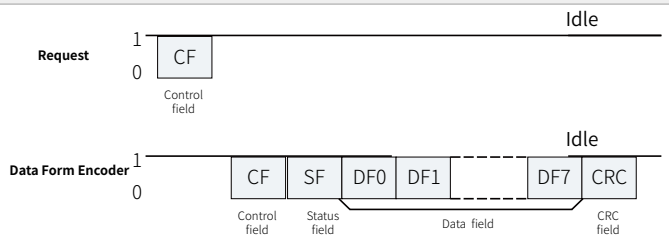 *** The data number of DF depends on different CF.**
Write to E²PROM	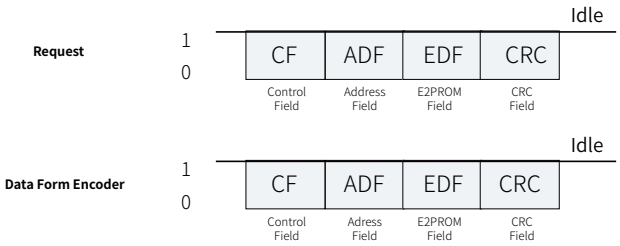 ***The request frame has the same content as the return frame.**
Read from E²PROM	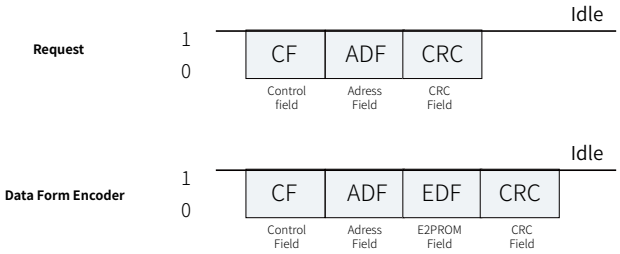 ***The content of the accessed address is added in the return frame.**

4. Detailed Description

4.1 Control field（CF）

CF consists of one data word, and its categories and contents are shown in the following table:

CF category	CF type	Remarks
Read data	ID0(0x02)	Read absolute position data (CF+SF+ABS+CRC)
	ID1(0x8A)	Read multi-turn data (CF+SF+ABM+CRC)
	ID2(0x92)	Read encoder ID information (CF+SF+ENID+CRC)
	ID3(0x1A)	Read all data（CF+SF+ABS+ENID+ABM+ALMC+CRC）
Write to E²PROM	ID6(0x32)	8-bit user data can be written to the specified address. Within 20 μs after the command has been transmitted in the specified format, the encoder sends a response. Do not communicate with the encoder during this period
Read from E²PROM	IDD(0xEA)	8-bit user data can be read from the specified address. Within 20 μs after the command has been transmitted in the specified format, the encoder sends a response. Do not communicate with the encoder during this period
Reset	ID7(0xBA)	The reset instruction is sent for 10 consecutive times at a time interval of not less than 62.5μs to reset all the fault flags.
	ID8(0xC2)	The reset command is sent for 10 consecutive times at a time interval of not less than 62.5μs to reset any single lap position to zero. Even if it is powered on again, the position still keeps the reset position data.
	ID8(0x62)	The reset instruction is sent for 10 consecutive times at a time interval of not less than 62.5μs, which will reset the multi-turn data to zero (without affecting the single-turn data). At the same time, all the fault flag bits are reset.

4.2 Status field（SF）

SF consists of 1 byte, and the definition of each bit is shown in the following table:

Bit domain	Definition	Description
Bit0	Rsvd	“0”
Bit1	Rsvd	“0”
Bit2	Rsvd	“0”
Bit3	Rsvd	“0”
Bit4	Counting Error	Same as ALMC.Bit2
Bit5	Xor Multi Error	Equivalent to the OR of ALMC.Bit5, Bit6, and Bit7
Bit6	Rsvd	“0”
Bit7	Rsvd	“0”

4.3 Data field (DF0~DF7)

According to different CF types, there are different bytes in DF, as shown in the following table:

CF type	DF0	DF1	DF2	DF3	DF4	DF5	DF6	DF7
ID0（0x02）	ABS0	ABS1	ABS2					
ID1（0x8A）	ABM0	ABM1	ABM2					
ID2（0x92）	ENID							
ID3（0x1A）	ABS0	ABS1	ABS2	ENID	ABM0	ABM1	ABM2	ALMC
ID7（0xBA）	ABS0	ABS1	ABS2					
ID8（0xC2）	ABS0	ABS1	ABS2					
IDC（0x62）	ABS0	ABS1	ABS2					

Remarks：

（1）ABS 0~ABS2 are the low, middle and high bits of the absolute position of the encoder, respectively, in which the high 7 bits of ABS2 are 0, and other data constitute 17-bit position information (for a 23-bit encoder, the high 17bit of ABS 2 is 0, and the rest are valid bits).

（2）ABM0~ABM2 are the low, middle and high positions of the encoder's multi-turn positions, where ABM2 is 0, and other data constitute 16bits multi-turn position information.

（3）ENID is the encoder ID information with the value of 0x11 (17bit) or 0x17 (23bit).

（4）ALMC is the encoder fault flag bit, see the fault description for details.

4.4 Fault description

ALMC faults are listed in the following table:

Bit	0	1	2	3	4	5	6	7
Definition	Over-speed	“0”	Counting Error	“0”	“0”	Multi-turn Error	Battery Error	Battery Alarm

The descriptions of individual fault flags are provided in the following table:

Fault name	Description	Corrective Action
Over-speed	In 5 V power supply mode, the rotational speed exceeds 7,200 rpm	Power-cycle the encoder
Counting Error	Single-turn position calculation error	Power-cycle the encoder
Multi-turn Error	Multi-turn data loss or multi-turn counting error	Reset the fault
Battery Error	The battery voltage falls below 2.9 V, triggering the fault flag	Check the battery power supply circuit and replace the battery
Battery Alarm	The battery voltage falls below 3.1 V, triggering the alarm flag	Replace the battery with one of normal voltage. The alarm will clear automatically

5. Time sequence description

5.1 Sequence chart

Category	Sequence chart
Power-on Timing Chart	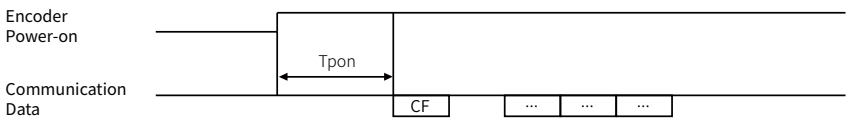
CF Communication Timing Chart	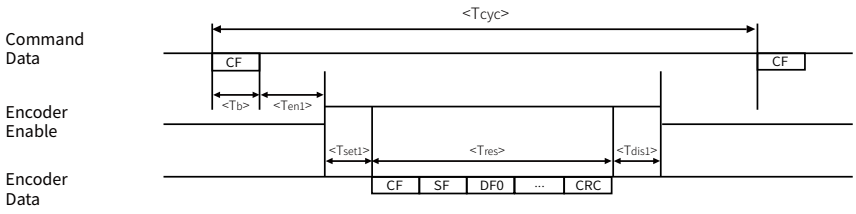
EEPROM Communication Timing Chart	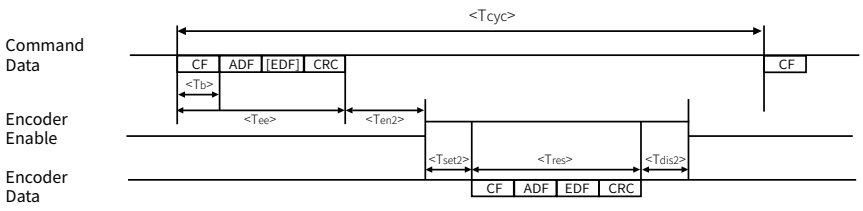

5.2 Detailed index

Characteristic	Symbol	Minimum	Default	Maximum	Unit	Note
Power-on time	Tpon		450	550	ms	
Command cycle period	Tcyc	62.5			μs	
Data byte time	Tb		4		μs	
Encoder enable delay time	Ten1	1.5		3.5	μs	
	Ten2		4.5		μs	
Encoder EEPROM Command time	Tee		12		μs	Read:3 bytes data
			16		μs	Write:4 bytes data
Encoder response time	Tres		4*N		μs	N bytes data
Encoder data set-up delay time	Test1	0.8		2	μs	
	Test2	1		1.5	μs	
Encoder disable delay time	Tdis1	0.6		1.2	μs	
	Tdis2		1.3		μs	

Felix-Wankel-Str.1, 85221 Dachau, Germany

Tel: +49 (0) 8131 337578-0
E-mail: info@tbfsensor.de

TBF Electronic Technology GmbH (German branch)

Building 6, Dazu Enterprise Bay,
8th yard of Liangshuihe 2nd street, BDA P.R.China

Tel: +86 10-67948976 67948916
Fax: +86 10-67948979

Beijing Tebeifu Electronic Technology Co., Ltd.

www.tbfsensor.com

For more customizable products, please contact us.