

# Optical integrated multi-turn absolute value encoder

# BMTA44

# Catalogue

1. Product Features 3
2. Naming Rule 3
3. Technical Parameter 4
4. Structural Drawings 5
5. Recommended Motor And Design Dimensions 6
6. Cable Definition 6
7. Installation Steps 6
8. Installation Accessories 8
9. Specifications and Models 8

# BMTA44 Optical integrated multi-turn absolute value encoder

## 1. Product Features

+ Integrated structural design, convenient installation and simple operation.
+ The straight cone shaft is optional, and the installation adaptability is high.
+ High rigidity, high response, high positioning accuracy, more accurate and smooth control.



## 2.Naming Rule

| B | M | T | A | 4 | 4 | | |

# 3. Technical Parameter

| | | | | | | |
|---|---|---|---|---|---|---|
| **Performance** | | | | | | |
| Single-turn resolution | | 23bit/17bit | | | | |
| Multi-turn resolution | | 16bit | | | | |
| Absolute positioning accuracy | | ⩽ ±50 second of arc | | | | |
| Repetitive positioning accuracy | | ⩽ ±3 second of arc | | | | |
| Auxiliary function | | Fault early warning；Battery voltage eraly warning | | | | |
| **Interface** | | | | | | |
| Communication interface | | RS485 | | | | |
| Coding direction | | CCW | | | | |
| Output code system | | Binary system | | | | |
| Baud rate | | 2.5Mbps | | | | |
| Communication frequency | | ⩽ 16kHz | | | | |
| **Electrical parameters** | | | | | | |
| Specifications | | Temperature T=25°C | | | | |
| | | Least value | | Representative value | | Crest value |
| Service voltage | | 4.75V | | 5V | | 5.25V |
| Current of main power supply | | — — | | 90mA | | — — |
| Battery voltage | | — — | | 3.6V DC | | — — |
| Battery power consumption current | | — — | | 30μA | | — — |
| Battery fault voltage | | — — | | 2.9V | | — — |
| Battery pre-warning voltage | | — — | | 3.1V | | — — |
| Mode switching voltage | Main power conversion low power consumption mode | — — | | 4.2V | | — — |
| | Low power conversion main power supply mode | — — | | 4.3V | | — — |
| Differential output level | High level | 3.5V | | — — | | — — |
| | Low level | — — | | — — | | 1.7V |
| Along the time of change | | — — | | — — | | 100ns |
| Insulation resistance | | 50MΩ | | — — | | — — |
| Connection Method | | Terminal type：8pin (Cable selection) | | | | |
| **Mechanical parameter** | | | | | | |
| Shaft Diameter | | Straight shaft | | Tapered shaft | | |
| | | Φ8mm/Φ6mm | | Φ9mm (1：10) | | |
| Weight | | Approximately 0.065 kg (excluding the connecting cable) | | | | |
| Maximum Shaft Speed | | ⩽ 6,000rpm | | | | |
| Rotor Angular Acceleration | | Power supply ⩽ 80,000rad/s², Battery supply ⩽ 4,000rad/s² | | | | |
| Moment of inertia | | 0.68kg·mm² | | | | |
| Starting torque (20° C) | | ⩽ 0.005N·m | | | | |
| Output Shaft Allowable Deviation | Shaft type | Axial | Axial float | Radial | Radial runout | Tilt Angle |
| | Straight shaft | ±0.5mm | ＜ 0.1mm | ±0.1mm | ＜ 0.01mm | ＜ 0.1° |
| | Tapered shaft | — — | ＜ 0.1mm | ±0.1mm | ＜ 0.01mm | ＜ 0.1° |
| **Enviromental parameter** | | | | | | |
| Protection degree | | IP40 | | | | |
| Operating temperature range | | -20...105°C | | | | |
| Storage temperature range | | -40...120°C | | | | |
| Relative humidity | | ⩽ 90% (40° C/21d, based on EN 60068-2-78); no condensation | | | | |
| Vibrate | | 10...55 Hz, amplitude 1.5mm;55...2000Hz, acceleration 98m/s²;<br>XYZ in three directions, 2 hours each, for a total of 6 hours. | | | | |
| Mechanical shock | | Impact acceleration: 980 m/s², 11 ms; 3 times per direction, totaling 18 times | | | | |
| Electromagnetic compatibility | | IEC61000-4 | | | | |

# 4. Structural Drawings

### Tapered Shaft

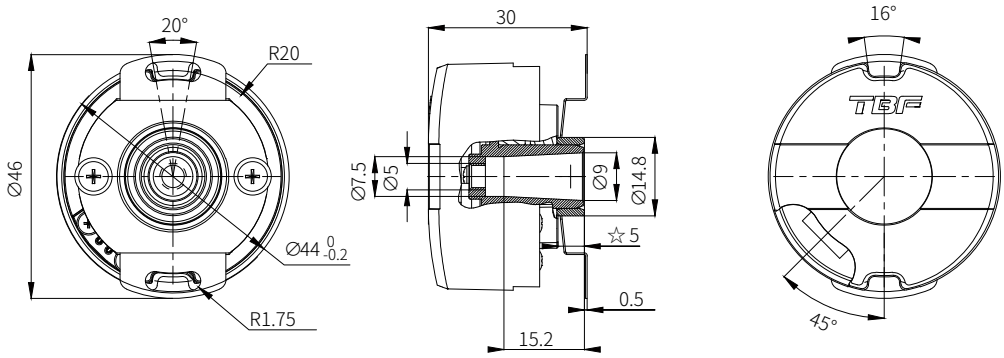


☆ The size is the distance between the spring plate mounting surface and the spindle end face.

### Straight Shaft

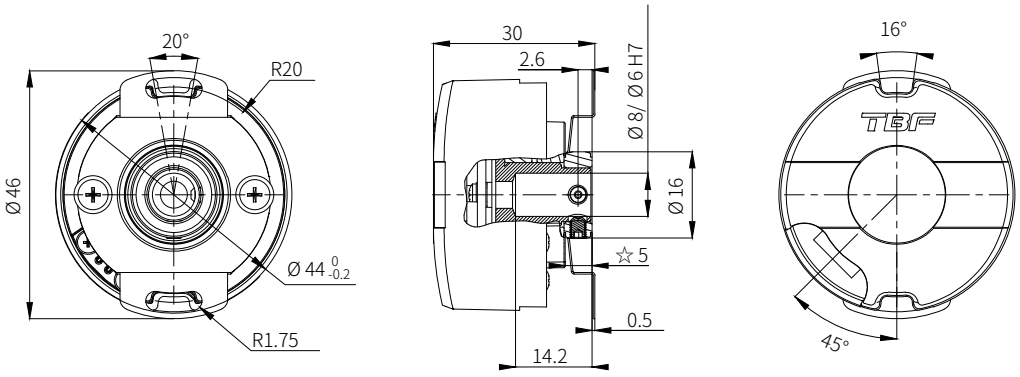


☆ The size is the distance between the spring plate mounting surface and the spindle end face.

| | | | |
|---|---|---|---|
| Spring Clip Component Drawings | 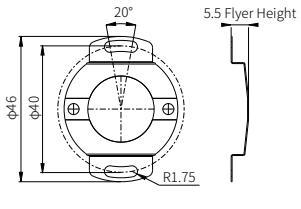 | 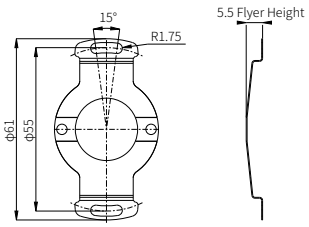 | 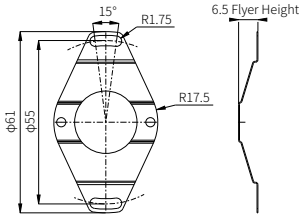 |
| Number | SP4002 | SP5501 | SP5502 |
| Cable | 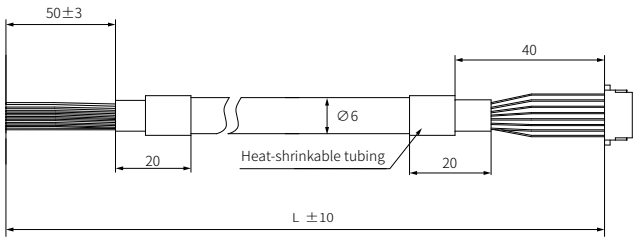 | | |

## 5. Recommended Motor Terminal Design Dimensions

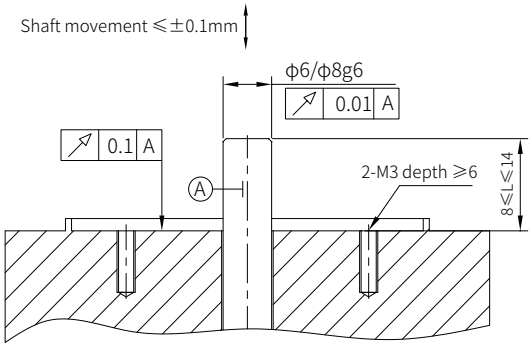


Straight Shaft

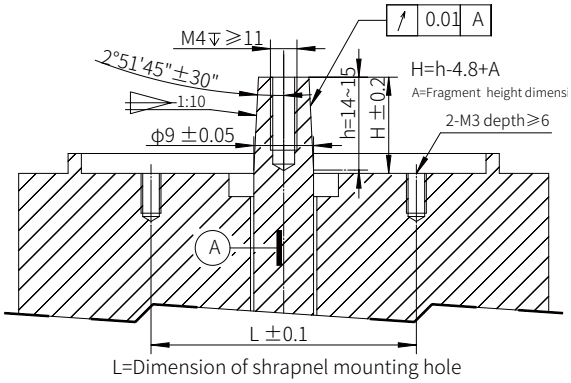


Tapered Shaft

## 6. Cable Definition

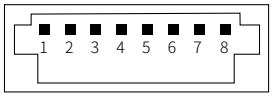


| Pin | 1 | 2 | 3 | 4 | 5 | 6 | 7 | 8 |
|---|---|---|---|---|---|---|---|---|
| RS485 Definition | +5V | GND | RS485 + | RS485 - | Battery + | Battery GND | / | PE |
| Color | Red | Black | Blue | Yellow | Brown | White | / | Block |

## 7. Installation Steps

### 7.1 Piercing Shaft Installation Procedure

1. Place the encoder onto the motor shaft, ensuring good fit without tilting or looseness. Check motor dimensions and for any crushing injuries or foreign objects if necessary. Do not force the encoder down or strike it during installation.

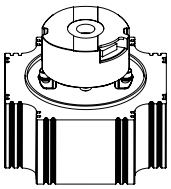

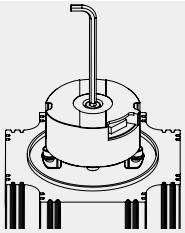

2. Insert the M4 hex socket head cap combination screw from above into the encoder shaft and tighten with the corresponding hex key torque wrench, recommended torque 16~20 kgf.cm.

3. Lightly tighten one side of the single M3 combination screw with the corresponding hex key torque wrench, then lightly tighten the other side. Then, sequentially tighten both sides with 8~10 kgf.cm torque.

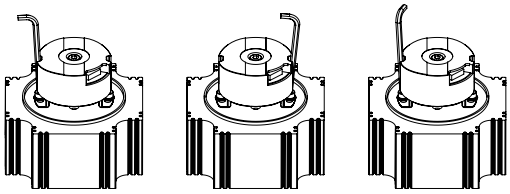

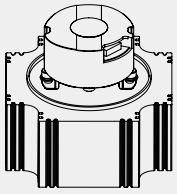

4. Affix the new dust-proof sticker on top of the rear cover.

### 7.2 Straight Shaft Installation Steps

1. Thread the encoder onto the motor shaft, ensuring the bottom surface of the connecting plate fits flush with the motor end rear cover. The encoder should thread on smoothly; if obstructed, check motor shaft diameter and for any crushing injuries. Do not force the encoder down, strike, or press the encoder circuit board during installation

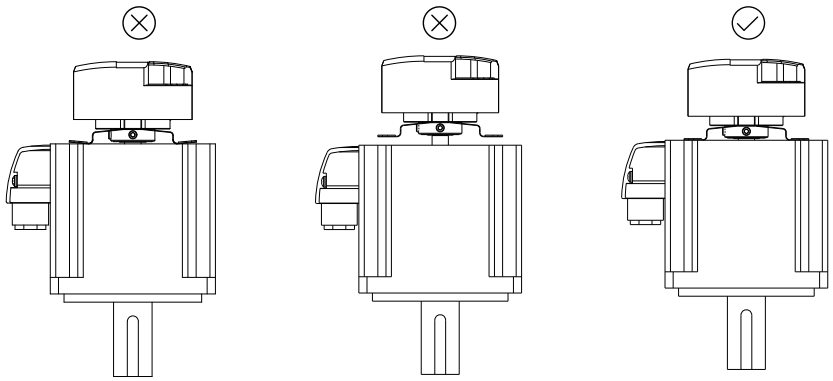

2. Dip the head of the M3X4 recessed end set screw in thread locker and lightly tighten the first set screw into the encoder using the corresponding hex key torque wrench to contact the motor shaft; insert the second set screw into the encoder shaft and tighten with 7 kgf.cm torque; then tighten the first screw with 7 kgf.cm torque.

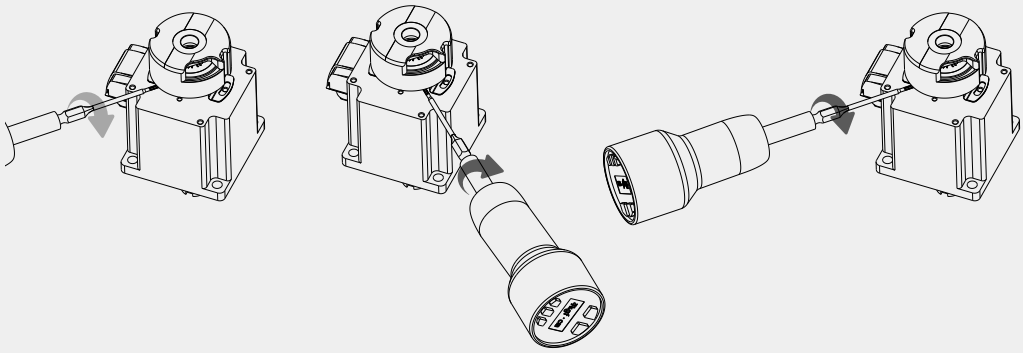

3. Lightly tighten one side of the single M3 combination screw with the corresponding hex key torque wrench, then lightly tighten the other side. Then, sequentially tighten both sides with 8~10 kgf.cm torque.

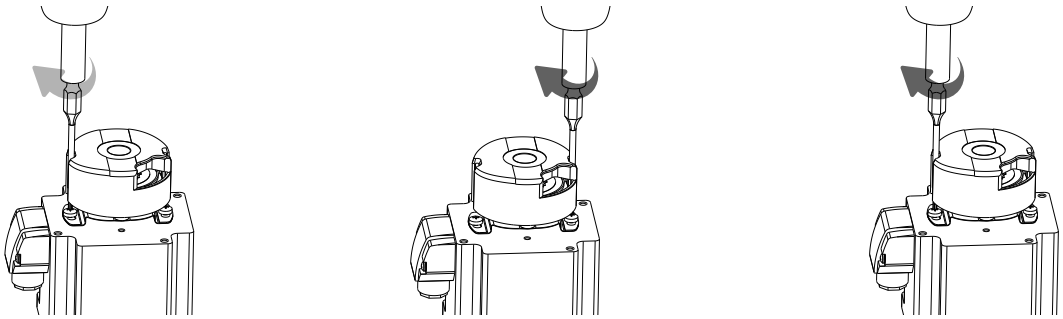

## 8. Installation Accessories

| Tapered Shaft | | Straight Shaft | |
|---|---|---|---|
| Accessories name | Description | Accessories name | Description |
| M4 x 18 combination screw x 1 | included in attachments | M3 x 4 top screws x 2 | included in attachments |
| M3 x 6 combination screw x 4 | included in attachments | M3 x 6 combination screw x 4 | included in attachments |
| Dust-Proof Sticker | included in attachments | Cables and Spring Clips | Customer options |
| Cables and Spring Clips | Customer options | | |

## 9. Specifications and Models

| Specification Model | Description | Optional Accessories |
|---|---|---|
| BMTA44-B06-17-16-RS485-WA00-SP4002 | Straight shaft6mm，Single-turn resolution 17bit，Number of turns 16bit | Spring clips, cables |
| BMTA44-B08-17-16-RS485-WA00-SP4002 | Straight shaft8mm，Single-turn resolution 17bit，Number of turns 16bit | Spring clips, cables |
| BMTA44-B06-23-16-RS485-WA00-SP4002 | Straight shaft6mm，Single-turn resolution 23bit，Number of turns 16bit | Spring clips, cables |
| BMTA44-B08-23-16-RS485-WA00-SP4002 | Straight shaft8mm，Single-turn resolution 23bit，Number of turns 16bit | Spring clips, cables |
| BMTA44-C09-17-16-RS485-WA00-SP4002 | Tapered Shaft9mm，Single-turn resolution 17bit，Number of turns 16bit | Spring clips, cables |
| BMTA44-C09-23-16-RS485-WA00-SP4002 | Tapered Shaft9mm，Single-turn resolution 23bit，Number of turns 16bit | Spring clips, cables |

Felix-Wankel-Str.1, 85221 Dachau, Germany

Tel: +49 (0) 8131 337578-0
E-mail: info@tbfsensor.de

**TBF Electronic Technology GmbH (German branch)**

Building 6, Dazu Enterprise Bay,
8th yard of Liangshuihe 2nd street, BDA P.R.China

Tel: +86 10-67948976 67948916
Fax: +86 10-67948979

**Beijing Tebeifu Electronic Technology Co., Ltd.**

www.tbfsensor.com

**For more customizable products, please contact us.**