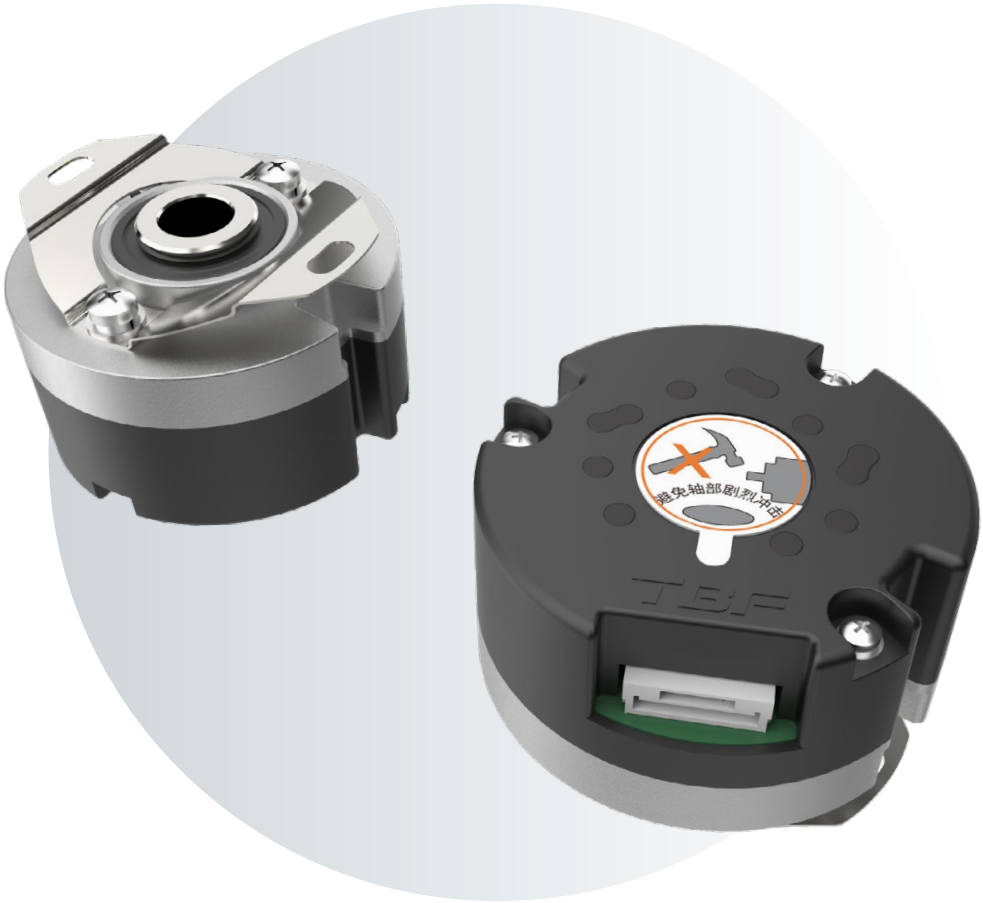

Optical integrated mechanical multi-turn absolute value encoder

BMTA48

Catalogue

1. Product Features 3
2. Naming Rule 3
3. Technical Parameter 4
4. Structural Drawings 5
5. Recommended Motor Terminal Design Dimensions 6
6. Cable Definition 6
7. Installation Steps 6
8. Installation Accessories 7
9. Specifications and Models 8

BMTA48 Optical integrated mechanical multi-turn absolute value encoder

1. Product Features

+ Mechanical multi-turn technology, no battery maintenance.
+ Optical principle, high rigidity, high response and high positioning accuracy.
+ Integral structure, easy installation
+ Ultra-thin design saves axial space.

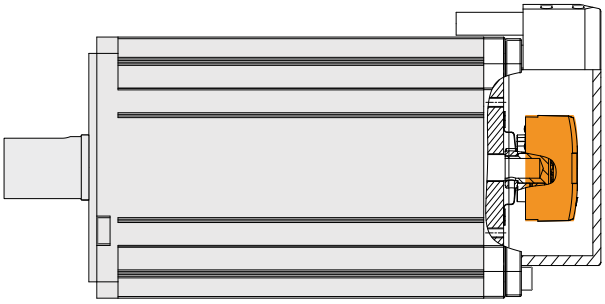

2. Naming Rule

BMTA48	C09	23	16G	RS485	WA0.5	SP	
A	B	C	D	E	F	G	H

A	**Serial model No.**		
	This product is a servo optical integrated absolute encoder with an outer diameter of 48mm		
B	**Shaft type**		
	C09	Tapered shaft Φ9，taper 1:10	
C	**Single-turn resolution**		
	17bit/23bit	17bit/23bit	23bit
D	**Multi-turn resolution**		
	12bit/16bit	12bit	12bit
E	**Protocol type**		
	RS485：RS485	BISS：BISS-C	SSI-B：SSI Binary system SSI-G：SSI Gray code
F	**Cable exit method**		
	WA0.5：Horizontal terminal outlet 0.5m		WA00：Without cable
G	**Spring clip type**		
	SP4005/SP5504		
H	**Other properties**		
	No special requirements. Default		

3. Technical Parameter

Performance						
Interface		RS485	BISS-C	SSI		
Single-turn resolution		17bit/23bit	17bit/23bit	23bit		
Multi-turn resolution		12bit/16bit	12bit	12bit		
Absolute positioning accuracy		17bit: ⩽ ±50 second of arc, 23bit: ⩽ ±50 second of arc				
Repetitive positioning accuracy		17bit: ⩽ ±10 second of arc, 23bit: ⩽ ±3 second of arc				
Auxiliary function		Fault early warning				
Interface						
Communication interface		RS485	BISS-C	SSI		
Coding direction		CCW	CCW	CCW/CW		
Output code system		Binary system	Binary system	Binary system / Gray code		
Baud rate		2.5Mbps	⩽ 10Mbps	⩽ 4Mbps		
Communication frequency		⩽ 16kHz	⩽ 32kHz	⩽ 16kHz		
Electrical parameters						
Specifications		Temperature T=25°C				
		Minimum value	Typical value	Maximum value		
Supply voltage		4.75V	5V	5.25V		
Main power supply consumption current		— —	RS485：135mA BISS-C：150mA SSI：150mA	— —		
Differential output level	High level	3.5V	— —	— —		
	Low level	— —	— —	1.7V		
Edge transition time		— —	— —	100ns		
Insulance		50MΩ	— —	— —		
Connection method		Terminal type: 8-pin (cable optional)				
Mechanical parameter						
Shaft diameter		Tapered shaft Φ9mm (1：10)				
Weight		≈ 0.07kg Without connecting wire and spring clip				
Maximum shaft speed		⩽ 6,000rpm				
Rotor angular acceleration		⩽ 80,000 rad/s for power supply				
Moment of inertia		≈ 0.49kg·mm²				
Starting torque (20°C)		⩽ 1N·m				
Output shaft allowable deviation	shaft type	Axial	Axial float	Radial	Radial runout	Tilt Angle
	Tapered shaft	±0.5mm	＜ 0.1mm	±0.1mm	＜ 0.01mm	＜ 0.1°
Environmental parameter						
Protection class		IP40				
Operating temperature range		-20...105°C				
Storage temperature range		-40...120°C				
Relative humidity		⩽ 90% (40°C /21d，EN 60068-2-78)；No condensation				
Vibration		10...55 Hz, amplitude 1.5mm; 55...2000Hz, acceleration 98m/s²; XYZ in three directions, 2 hours each, for a total of 6 hours.				
Mechanical shock		Impact acceleration: 980 m/s², 11 ms; 3 times per direction, totaling 18 times				
Electromagnetic compatibility		IEC61000-4				

4. Structural Drawings

Matching SP4005 spring clip outline dimensions

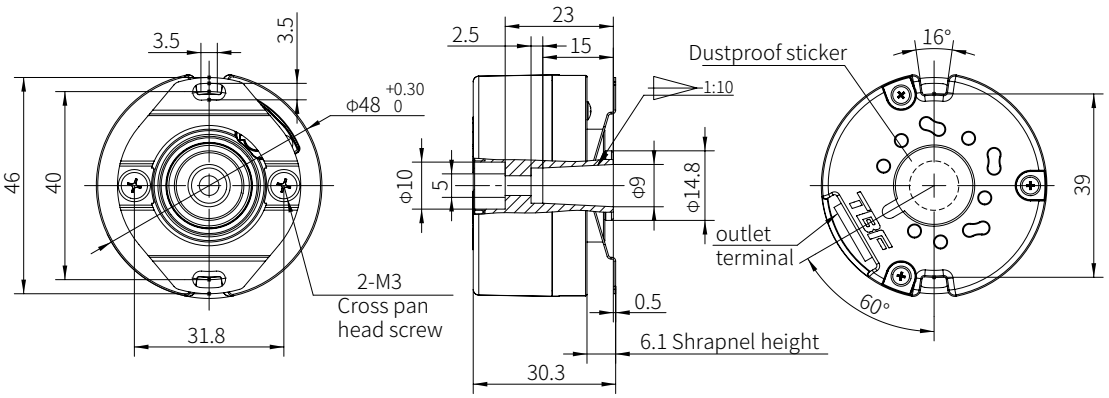

Matching SP5504 spring clip outline dimensions

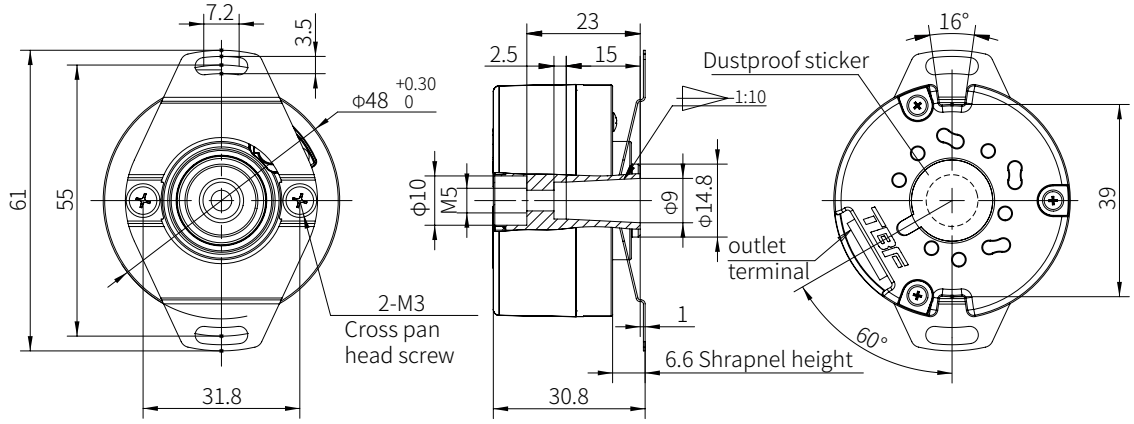

Drawing of spring clip	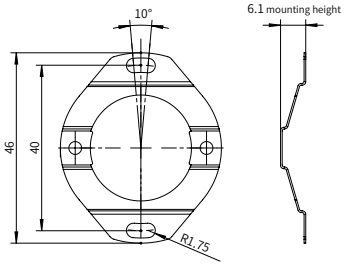	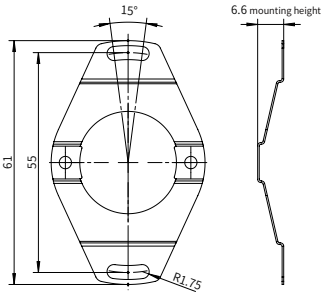
NO.	SP4005	SP5504

5. Recommended Motor Terminal Design Dimensions

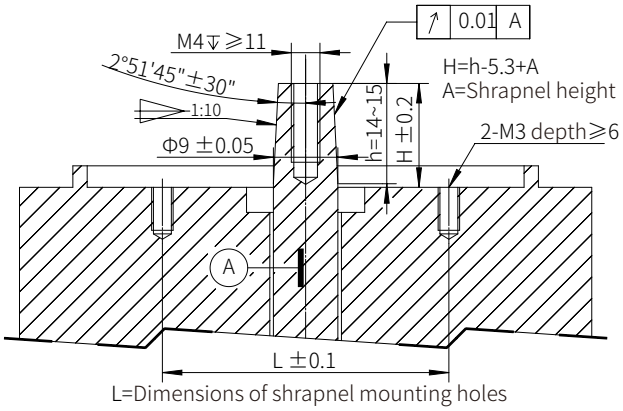

L=Dimensions of shrapnel mounting holes

6. Cable Definition

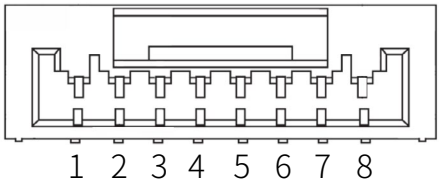

PIN	1	2	3	4	5	6	7	8
RS485	+5V	GND	485+	485-	NC	NC	NC	PE
BISS-C	+5V	GND	MA+	MA -	SLO+	SLO-	NC	PE
SSI	+5V	GND	MA+	MA -	SLO+	SLO-	NC	PE
Color	Red	Black	Blue	Yellow	Brown	White	/	Block

7. Installation Steps

7.1 Installation diagram

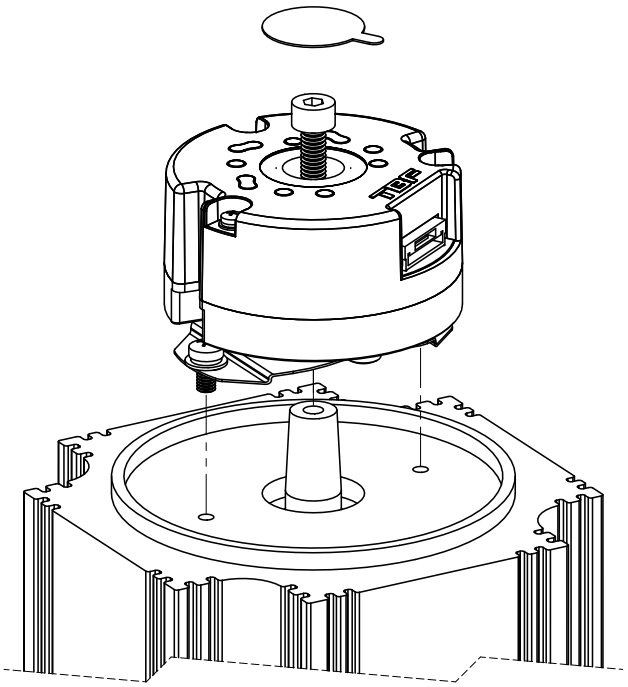

7.2 Tapered shaft motor installation

1. Put the encoder on the motor shaft as a whole, and the encoder shaft and the motor shaft will fit well without skew or looseness during normal cooperation. In case of the above situation, it is necessary to check the size of the motor and whether there are scars and foreign objects. Do not press the encoder hard or knock it during loading.

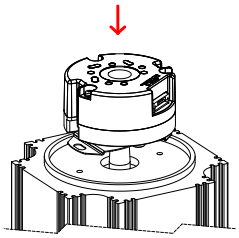

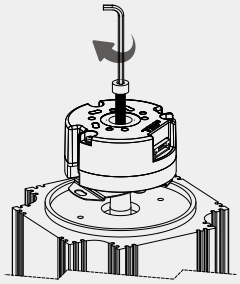

2. Tear off the dust-proof sticker, install M4 hexagon socket head combination screw, and tighten the screw with hexagon socket torque wrench. The recommended torque is 16~20kgf.cm.

3. Use an Allen wrench to lightly lock the M3 combination screw on one side, and then lightly lock the M3 combination screw on the other side. Then use 8~10kgf. cm torque to lock the screws on both sides in turn.

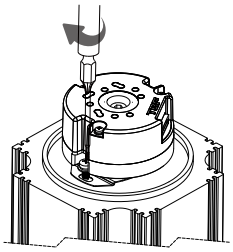

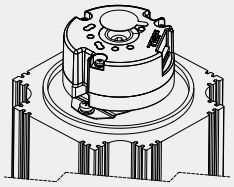

4. Stick a new dust-proof sticker on the back cover.

8. Installation Accessories

Installation accessories	Description
M4 x 16 combination screw x 1	Included in accessories
M3 x 6 combination screw x 4	Included in accessories
Dust-proof sticker	Included in accessories
Cables and spring lips	Customer options

9. Specifications and Models

Specification model	Description	Optional accessories
BMTA48-C09-17-12G-RS485-WA00-SP4005	Tapered shaft 9mm，single-turn 17bit，multi-turn 12bit，RS485 protocol，without cable	spring clip, cable
BMTA48-C09-23-12G-RS485-WA00-SP4005	Tapered shaft 9mm，single-turn 23bit，multi-turn 12bit，RS485 protocol，without cable	spring clip, cable
BMTA48-C09-17-16G-RS485-WA00-SP4005	Tapered shaft 9mm，single-turn 17bit，multi-turn 16bit，RS485 protocol，without cable	spring clip, cable
BMTA48-C09-23-16G-RS485-WA00-SP4005	Tapered shaft 9mm，single-turn 23bit，multi-turn 16bit，RS485 protocol，without cable	spring clip, cable
BMTA48-C09-17-12G-BISS-WA00-SP4005	Tapered shaft 9mm，single-turn 17bit，multi-turn 12bit，BISS-C protocol，without cable	spring clip, cable
BMTA48-C09-23-12G-BISS-WA00-SP4005	Tapered shaft 9mm，single-turn 23bit，multi-turn 12bit，BISS-C protocol，without cable	spring clip, cable
BMTA48-C09-23-12G-SSI-B-WA00-SP4005	Tapered shaft 9mm，single-turn 23bit，multi-turn 12bit，SSI protocol，binary system	spring clip, cable
BMTA48-C09-23-12G-SSI-G-WA00-SP4005	Tapered shaft 9mm，single-turn 23bit，multi-turn 12bit，SSI protocol，gray code	spring clip, cable

Felix-Wankel-Str.1, 85221 Dachau, Germany

Tel: +49 (0) 8131 337578-0
E-mail: info@tbfsensor.de

TBF Electronic Technology GmbH (German branch)

Building 6, Dazu Enterprise Bay,
8th yard of Liangshuihe 2nd street, BDA P.R.China

Tel: +86 10-67948976 67948916
Fax: +86 10-67948979

Beijing Tebeifu Electronic Technology Co., Ltd.

www.tbfsensor.com

For more customizable products, please contact us.