


# Optical split multi-turn absolute value encoder

# BMTAS35 & BMTAS46

# Catalogue

1. Product Features 3
2. Naming Rule 3
3. Technical Parameter 4
4. Structural Drawings 5
5. Recommended Motor Terminal Design Dimensions 5
6. Cable Definition 6
7. Installation Methods 6
8. Installation Step 7
9. Installation Accessories 7
10. Specifications and Models 7
11. RS485 protocol 8

# BMTAS35 & BMTAS46

# Optical split multi-turn absolute value encoder

## 1. Product Features

+ 15.4mm ultra-thin design meets the requirements of extreme space installation.
+ Special structural design, easy installation.
+ One-click debugging saves worry and time.



## 2. Naming Rule

| B | M | T | A | S | | | B | 0 | 6 | | | 1 | 6 | R | S | 4 | 8 | 5 | W | A | 0 | . | 5 | |
|---|---|---|---|---|---|---|---|---|---|---|---|---|---|---|---|---|---|---|---|---|---|---|---|---|
| A | | | | | B | | C | | | D | | E | | F | | | | | G | | | | | H | |

| | | |
|---|---|---|
| **A** | **Serial model No.** | |
| | Split absolute value Optical encoder | |
| **B** | **Measure** | |
| | 35：The outer diameter of the product body is 35mm | 46：The outer diameter of the product body is 46mm |
| **C** | **Shaft type** | |
| | B06 | Straight shaft，ϕ6mm |
| **D** | **Single-turn resolution** | |
| | 17：17bit | 23：23bit |
| **E** | **Multi-turn resolution** | |
| | 16：16bit | |
| **F** | **Protocol type** | |
| | RS485: 485 protocol | |
| **G** | **Cable exit method** | |
| | WA00：Without cable | WA0.5: Horizontal terminal outlet 0.5m |
| **H** | **Other properties** | |
| | No special requirements. Default | |

# 3. Technical Parameter

| | | | | | | |
|---|---|---|---|---|---|---|
| **Performance** | | | | | | |
| Single-turn resolution | | 17bit/23bit | | | | |
| Multi-turn resolution | | 16bit | | | | |
| Absolute positioning accuracy | | Depend on that rotation accuracy of the motor shaft | | | | |
| Repetitive positioning accuracy | | ⩽ ±5 second of arc | | | | |
| Auxiliary function | | Fault early warning; battery voltage early warning | | | | |
| **Interface** | | | | | | |
| Communication interface | | RS485 | | | | |
| Coding direction | | CCW | | | | |
| Output code system | | Binary system | | | | |
| Baud rate | | 2.5Mbps | | | | |
| Communication frequency | | ⩽ 16kHz | | | | |
| **Electrical parameters** | | | | | | |
| Specifications | | Temperature T=25°C | | | | |
| | | Minimum value | | Typical value | | Maximum value |
| Supply voltage | | 4.75V | | 5V | | 5.25V |
| Main power supply consumption current | | — — | | 60mA | | — — |
| Battery voltage | | — — | | 3.6V DC | | — — |
| Battery power consumption current | | — — | | 30μA | | — — |
| Battery fault voltage | | — — | | 2.9V | | — — |
| Battery pre-warning voltage | | — — | | 3.1V | | — — |
| Mode switching voltage | Main power conversion low power consumption mode | — — | | 4.2V | | — — |
| | Low power conversion main power supply mode | — — | | 4.3V | | — — |
| Differential output level | High level | 3.5V | | — — | | — — |
| | Low level | — — | | — — | | 1.7V |
| Edge transition time | | — — | | — — | | 100ns |
| Insulance | | 50MΩ | | — — | | — — |
| Connection method | | Terminal type: 8-pin (cable optional) | | | | |
| **Mechanical parameter** | | | | | | |
| Shaft diameter | | Straight shaft | | | | |
| | | Φ6mm | | | | |
| Weight | | ≈ 30g (Without connecting wire) | | | | |
| Maximum shaft speed | | ⩽ 6,000rpm | | | | |
| Rotor angular acceleration | | ⩽ 80,000 rad/s for power supply and ⩽ 4000 rad/s for battery supply. | | | | |
| Moment of inertia | | 0.30kg·mm² | | | | |
| Starting torque (20°C ) | | ⩽ 0.005N·m | | | | |
| Output shaft allowable deviation | Shaft type | Axial | Axial float | Radial | Radial runout | Tilt Angle |
| | Straight shaft | — — | ＜ 0.1mm | ±0.1mm | ＜ 0.01mm | ＜ 0.1° |
| **Environmental parameter** | | | | | | |
| Protection class | | Motor rear cover protection | | | | |
| Operating temperature range | | -20°C ...105°C | | | | |
| Storage temperature range | | -40°C ...125°C | | | | |
| Relative humidity | | ⩽ 90% (40°C /21d，EN 60068-2-78)；No condensation | | | | |
| Vibration | | 10...55 Hz, amplitude 1.5mm;<br>55...2000Hz, acceleration 98m/s²;<br>XYZ in three directions, 2 hours each, for a total of 6 hours. | | | | |
| Mechanical shock | | Impact acceleration: 980 m/s², 11 ms; 3 times per direction, totaling 18 times | | | | |
| Electromagnetic compatibility | | IEC61000-4 | | | | |

# 4. Structural Drawings

### BMTAS35 outline dimension drawing

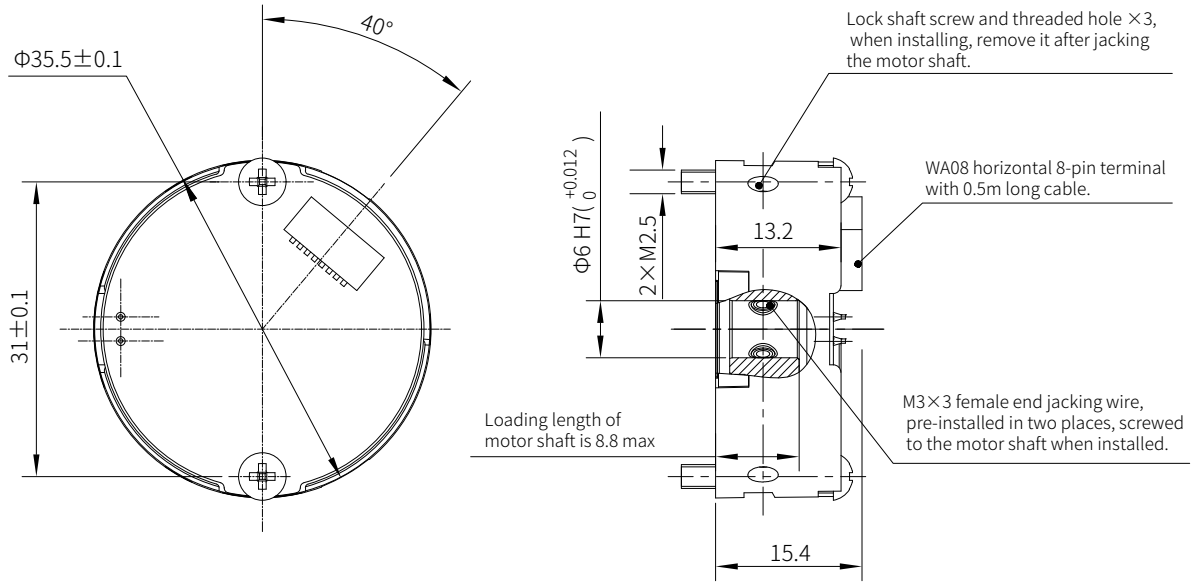


### BMTAS46 outline dimension drawing

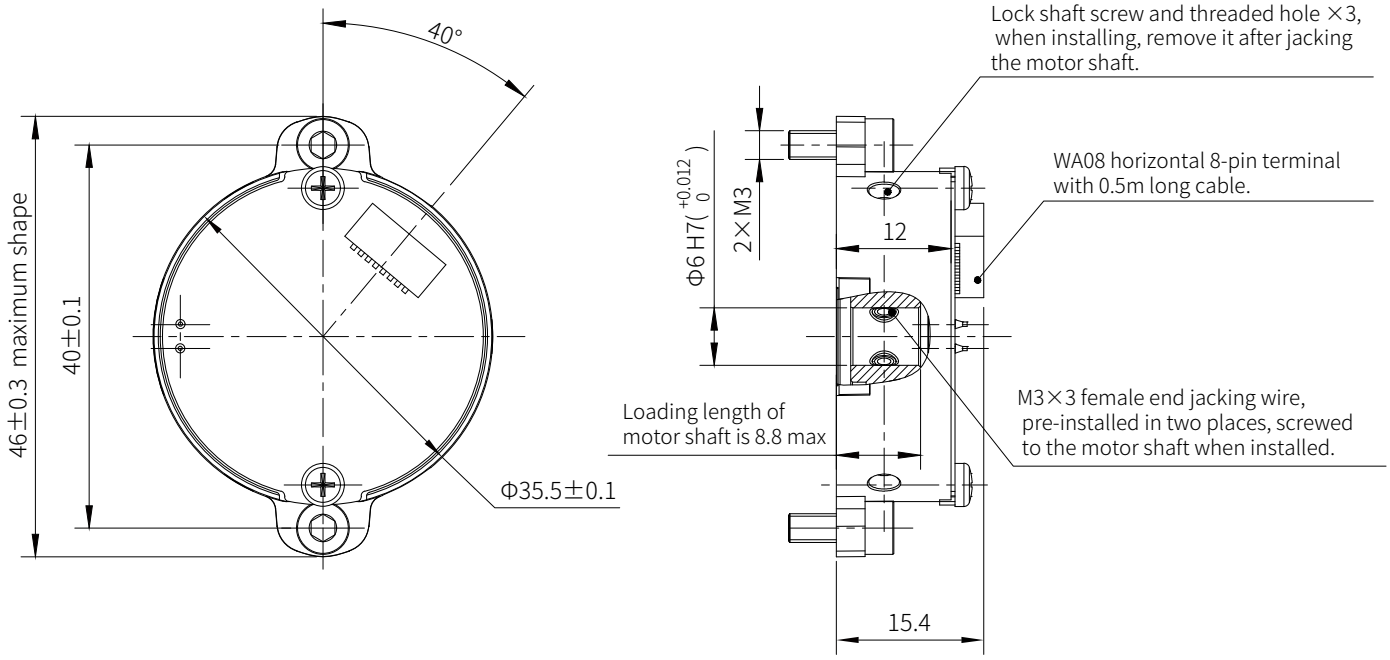

## 5. Recommended Motor Terminal Design Dimensions

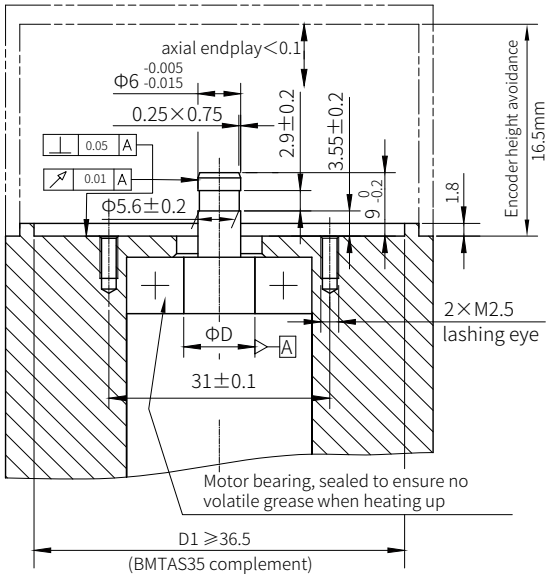


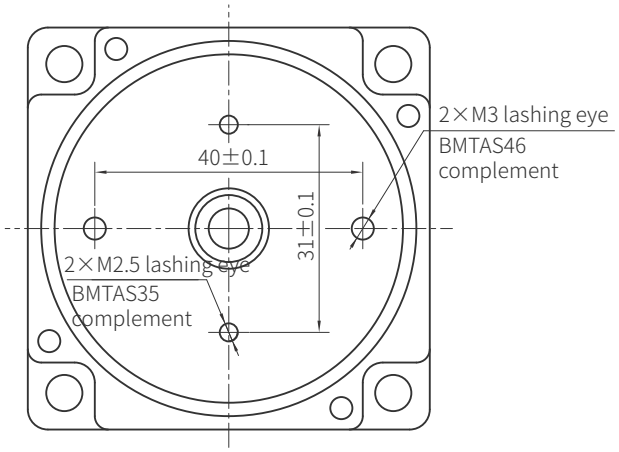


## 6. Cable Definition

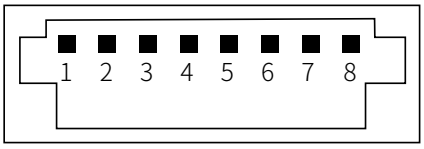


| NO. | 1 | 2 | 3 | 4 | 5 | 6 | 7 | 8 |
|---|---|---|---|---|---|---|---|---|
| Color | Red | Black | Blue | Yellow | Brown | White | / | Block |
| RS485 definition | +5V | GND | RS485 + | RS485 - | Battery + | GND | / | PE |

## 7. Installation Methods

### 7.1 BMTAS46 Series

#### 7.1 .1 Installation diagram

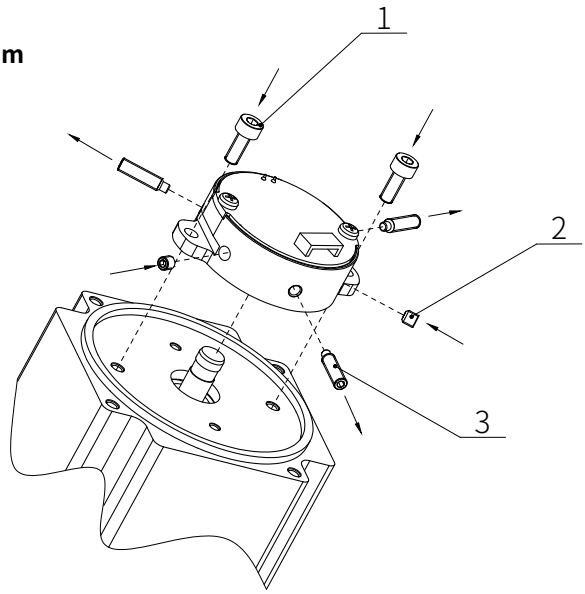


**installation tool**

Metric 1.5mm hexagon wrench with opposite side

Metric 2.5mm hexagon wrench with opposite side

## 8. Installation Step

1. Remove the dust-proof patch on the lower part of the encoder;

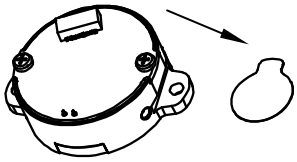

2. Align the encoder shaft hole with the motor shaft, and make the bottom surface of the encoder contact the cover surface of the rear end of the motor after penetrating; It is necessary to adjust the position of the encoder so that the screw hole is aligned with the motor fixed threaded hole (step 1 on the right); After it is in place, take the hexagon socket head cylinder screw (M3×8) in sequence 1 in the installation schematic diagram and install it into the holes on the mounting lugs on both sides (installation step 2 on the right);

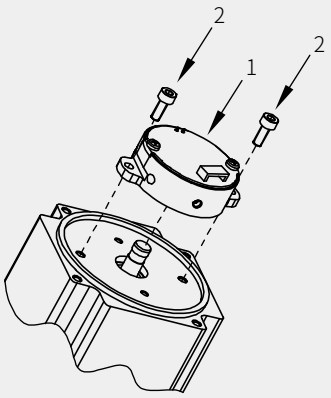


3. Use a 2.5mm Allen wrench on the opposite side to pre-tighten and screw in two screws in the "Installation Diagram";

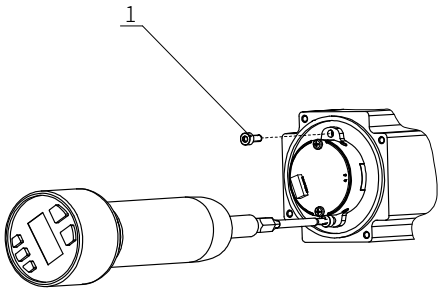


4. Then the torque of 4 ~ 5kgf cm is used to finally lock the screws in sequence 1 and install the encoder on the rear end cover of the motor.

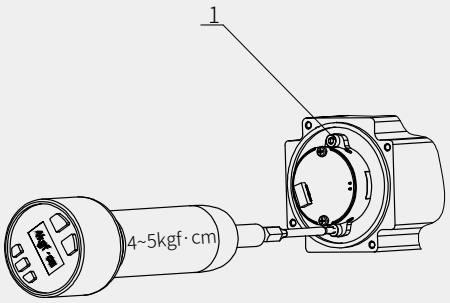


5. Then the torque of 4 ~ 5kgf cm is used to finally lock the screws in sequence 1 and install the encoder on the rear end cover of the motor.

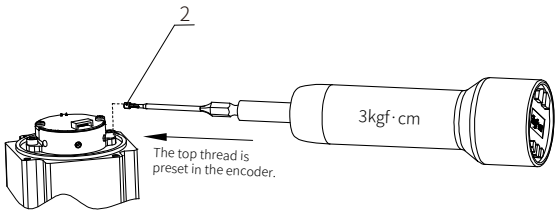


6. Adjust the torque value of the 1.5mm Allen wrench on the opposite side to 5kgf·cm, and complete the pre-tightening and locking of the No.2 screw in the "Installation Diagram"-another M3×3 hexagon socket set screws with cup point;

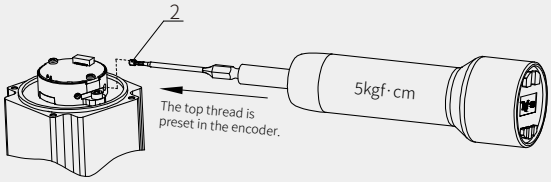

7. Continue to use the 1.5mm Allen wrench with the torque value of 5kgf·cm, and return to the encoder hole of M3×3 hexagon socket set screws with cup point loaded in step 5 to complete locking;

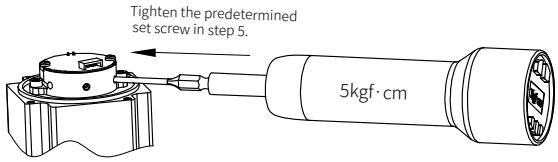


8. Use the 1.5mm Allen wrench on the opposite side to remove the sequence 3 screws in the "Installation Diagram"-three encoder shaft locking screws in turn to complete the installation of the encoder;

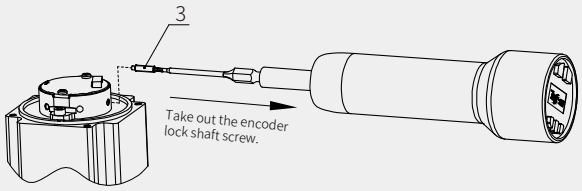


9. After connecting the interface cable, cover the rear cover of the motor, and connect the connecting cable to the test equipment for testing. After the detection function is normal, it means that the installation is correct, and the encoder installation process is over.

**The installation steps of BMTAS35 series products are the same as those of BMTAS46 series products. In the second step, a cross pan head screw (M2.5×16) is required, and in the third step, a cross torque wrench is used. Other steps are the same.**

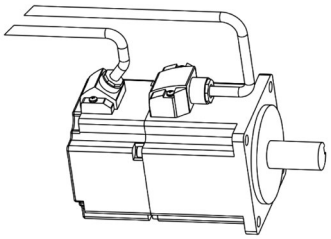

**Note: the encoder must be tested and confirmed by the workstation to ensure stable and reliable installation! ! !**

## 9. Installation Accessories

| BMTAS35 Installation accessories | BMTAS46 Installation accessories | Description |
|---|---|---|
| M2.5 x 16 screw x 2 | M3 x 8 socket head cap screw (Head ϕ4.5)x 2 | Included in accessories |
| M3×3 top thread (with thread glue) x 1 | M3×3 top thread (with thread glue) x 1 | Included in accessories |
| Cable | Cable | Customer selection |
| Metric 1.5mm hexagon wrench with opposite side | Metric 1.5mm hexagon wrench with opposite side | Customer self-configuration |
| Cross torque screwdriver | Metric 2.5mm hexagon wrench with opposite side | Customer self-configuration |

## 10. Specifications and Models

| Specification model | Description | Optional accessories |
|---|---|---|
| BMTAS35-B06-17-16-RS485-WA0.5 | Outside diameter 35mm ,Blind shaft ϕ6mm，single-turn17bit，multi-turn 16bit | Cables |
| BMTAS35-B06-23-16-RS485-WA0.5 | Outside diameter 35mm ,Blind shaft ϕ6mm，single-turn23bit，multi-turn 16bit | Cables |
| BMTAS46-B06-17-16-RS485-WA0.5 | Outside diameter 46mm ,Blind shaft ϕ6mm，single-turn17bit，multi-turn 16bit | Cables |
| BMTAS46-B06-23-16-RS485-WA0.5 | Outside diameter 46mm ,Blind shaft ϕ6mm，single-turn23bit，multi-turn 16bit | Cables |

# RS485 Protocol

## 1. Summary

| Unit | Description | Remarks |
|---|---|---|
| Communication code system | Binary system | -- |
| Communication circuit | Differential drive | RS485 |
| Data transmission content | Single-turn position information | 17-bit (supports up to 23-bit) |
| | Multi-turn position information | 16bit |
| Communication rate | 2.5Mbps | |

## 2. $E^2$PROM Communication specification

| Unit | Address | Description | Remarks |
|---|---|---|---|
| Readable user parameter address range | 0~0x7E*page 8 | User parameter field | This address field can be used to store user parameters, and some areas on page 8 are reserved and are not recommended for customers |
| Page address | 0x7F | 0...7 | Do not exceed this range |
| Maximum erasable times | 100000 times | | The number of times the operation can be executed |

## 3. Frame format

Each data frame consists of several data words. Each data word is transmitted and received using one start bit, eight data bits, and one stop bit. Bits are transmitted least significant bit (LSB) first and most significant bit (MSB) last.

| Unit | Description | Remarks |
|---|---|---|
| CF | Control Field | Identifies different command types |
| SF | Status Field | Indicates the encoder status |
| DF | Data Field | Encoder position data |
| ADF | Address Field | Accessible encoder address |
| EDF | $E^2$PROM Field | The content of the address |
| CRC | CRC verify | CRC polynomial:$x^8$+1 . All data bytes except the CRC are XORed |

| CF category | Diagrammatic presentation |
|---|---|
| Read position data | 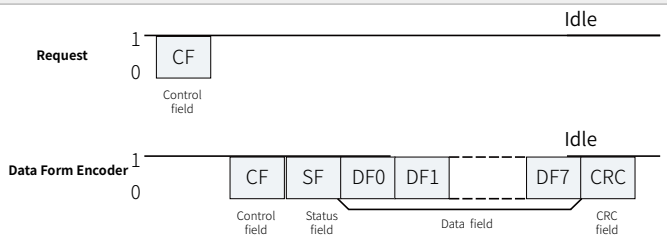 *** The data number of DF depends on different CF.** |
| Write to E²PROM | 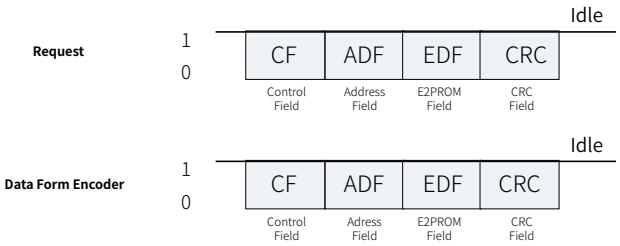 ***The request frame has the same content as the return frame.** |
| Read from E²PROM | 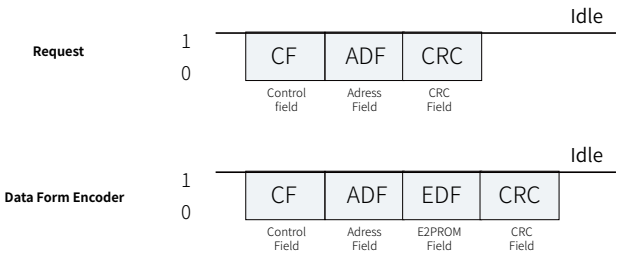 ***The content of the accessed address is added in the return frame.** |

# 4. Detailed Description

## 4.1 Control field（CF）

CF consists of one data word, and its categories and contents are shown in the following table:

| CF category | CF type | Remarks |
|---|---|---|
| Read data | ID0(0x02) | Read absolute position data (CF+SF+ABS+CRC) |
| | ID1(0x8A) | Read multi-turn data (CF+SF+ABM+CRC) |
| | ID2(0x92) | Read encoder ID information (CF+SF+ENID+CRC) |
| | ID3(0x1A) | Read all data（CF+SF+ABS+ENID+ABM+ALMC+CRC） |
| Write to E²PROM | ID6(0x32) | 8-bit user data can be written to the specified address. Within 20 μs after the command has been transmitted in the specified format, the encoder sends a response. Do not communicate with the encoder during this period |
| Read from E²PROM | IDD(0xEA) | 8-bit user data can be read from the specified address. Within 20 μs after the command has been transmitted in the specified format, the encoder sends a response. Do not communicate with the encoder during this period |
| Reset | ID7(0xBA) | The reset instruction is sent for 10 consecutive times at a time interval of not less than 62.5μs to reset all the fault flags. |
| | ID8(0xC2) | The reset command is sent for 10 consecutive times at a time interval of not less than 62.5μs to reset any single lap position to zero. Even if it is powered on again, the position still keeps the reset position data. |
| | ID8(0x62) | The reset instruction is sent for 10 consecutive times at a time interval of not less than 62.5μs, which will reset the multi-turn data to zero (without affecting the single-turn data). At the same time, all the fault flag bits are reset. |

### 4.2 Status field（SF）

SF consists of 1 byte, and the definition of each bit is shown in the following table:

| Bit domain | Definition | Description |
|---|---|---|
| Bit0 | Rsvd | “0” |
| Bit1 | Rsvd | “0” |
| Bit2 | Rsvd | “0” |
| Bit3 | Rsvd | “0” |
| Bit4 | Counting Error | Same as ALMC.Bit2 |
| Bit5 | Xor Multi Error | Equivalent to the OR of ALMC.Bit5, Bit6, and Bit7 |
| Bit6 | Rsvd | “0” |
| Bit7 | Rsvd | “0” |

### 4.3 Data field (DF0~DF7)

According to different CF types, there are different bytes in DF, as shown in the following table:

| CF type | DF0 | DF1 | DF2 | DF3 | DF4 | DF5 | DF6 | DF7 |
|---|---|---|---|---|---|---|---|---|
| ID0（0x02） | ABS0 | ABS1 | ABS2 | | | | | |
| ID1（0x8A） | ABM0 | ABM1 | ABM2 | | | | | |
| ID2（0x92） | ENID | | | | | | | |
| ID3（0x1A） | ABS0 | ABS1 | ABS2 | ENID | ABM0 | ABM1 | ABM2 | ALMC |
| ID7（0xBA） | ABS0 | ABS1 | ABS2 | | | | | |
| ID8（0xC2） | ABS0 | ABS1 | ABS2 | | | | | |
| IDC（0x62） | ABS0 | ABS1 | ABS2 | | | | | |

**Remarks:**

（1）ABS 0~ABS2 are the low, middle and high bits of the absolute position of the encoder, respectively, in which the high 7 bits of ABS2 are 0, and other data constitute 17-bit position information (for a 23-bit encoder, the high 17bit of ABS 2 is 0, and the rest are valid bits).

（2）ABM0~ABM2 are the low, middle and high positions of the encoder's multi-turn positions, where ABM2 is 0, and other data constitute 16bits multi-turn position information.

（3）ENID is the encoder ID information with the value of 0x11 (17bit) or 0x17 (23bit).

（4）ALMC is the encoder fault flag bit, see the fault description for details.

### 4.4 Fault description

ALMC faults are listed in the following table:

| Bit | 0 | 1 | 2 | 3 | 4 | 5 | 6 | 7 |
|---|---|---|---|---|---|---|---|---|
| Definition | Over-speed | “0” | Counting Error | “0” | “0” | Multi-turn Error | Battery Error | Battery Alarm |

The descriptions of individual fault flags are provided in the following table:

| Fault name | Description | Corrective Action |
|---|---|---|
| Over-speed | In 5 V power supply mode, the rotational speed exceeds 7,200 rpm | Power-cycle the encoder |
| Counting Error | Single-turn position calculation error | Power-cycle the encoder |
| Multi-turn Error | Multi-turn data loss or multi-turn counting error | Reset the fault |
| Battery Error | The battery voltage falls below 2.9 V, triggering the fault flag | Check the battery power supply circuit and replace the battery |
| Battery Alarm | The battery voltage falls below 3.1 V, triggering the alarm flag | Replace the battery with one of normal voltage. The alarm will clear automatically |

## 5. Time sequence description

### 5.1 Sequence chart

| Category | Sequence chart |
|---|---|
| Power-on Timing Chart | 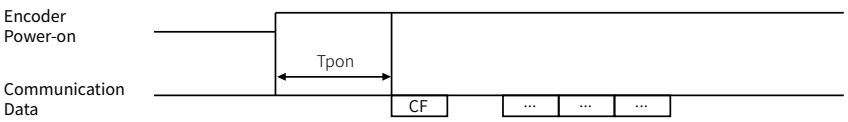 |
| CF Communication Timing Chart | 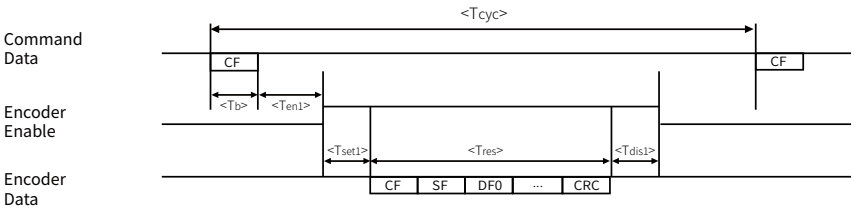 |
| EEPROM Communication Timing Chart | 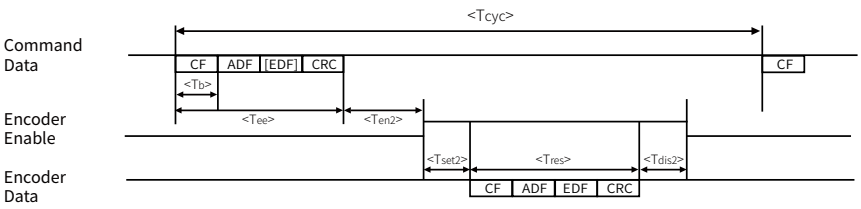 |

### 5.2 Detailed index

| Characteristic | Symbol | Minimum | Default | Maximum | Unit | Note |
|---|---|---|---|---|---|---|
| Power-on time | Tpon | | 450 | 550 | ms | |
| Command cycle period | Tcyc | 62.5 | | | μs | |
| Data byte time | Tb | | 4 | | μs | |
| Encoder enable delay time | Ten1 | 1.5 | | 3.5 | μs | |
| | Ten2 | | 4.5 | | μs | |
| Encoder EEPROM Command time | Tee | | 12 | | μs | Read:3 bytes data |
| | | | 16 | | μs | Write:4 bytes data |
| Encoder response time | Tres | | 4*N | | μs | N bytes data |
| Encoder data set-up delay time | Test1 | 0.8 | | 2 | μs | |
| | Test2 | 1 | | 1.5 | μs | |
| Encoder disable delay time | Tdis1 | 0.6 | | 1.2 | μs | |
| | Tdis2 | | 1.3 | | μs | |

Felix-Wankel-Str.1, 85221 Dachau, Germany

Tel: +49 (0) 8131 337578-0
E-mail: info@tbfsensor.de

**TBF Electronic Technology GmbH(German branch)**

Building 6, Dazu Enterprise Bay,
8th yard of Liangshuihe 2nd street, BDA P.R.China

Tel: +86 10-67948976 67948916
Fax: +86 10-67948979

**Beijing Tebeifu Electronic Technology Co., Ltd.**

www.tbfsensor.com

**For more customizable products, please contact us.**