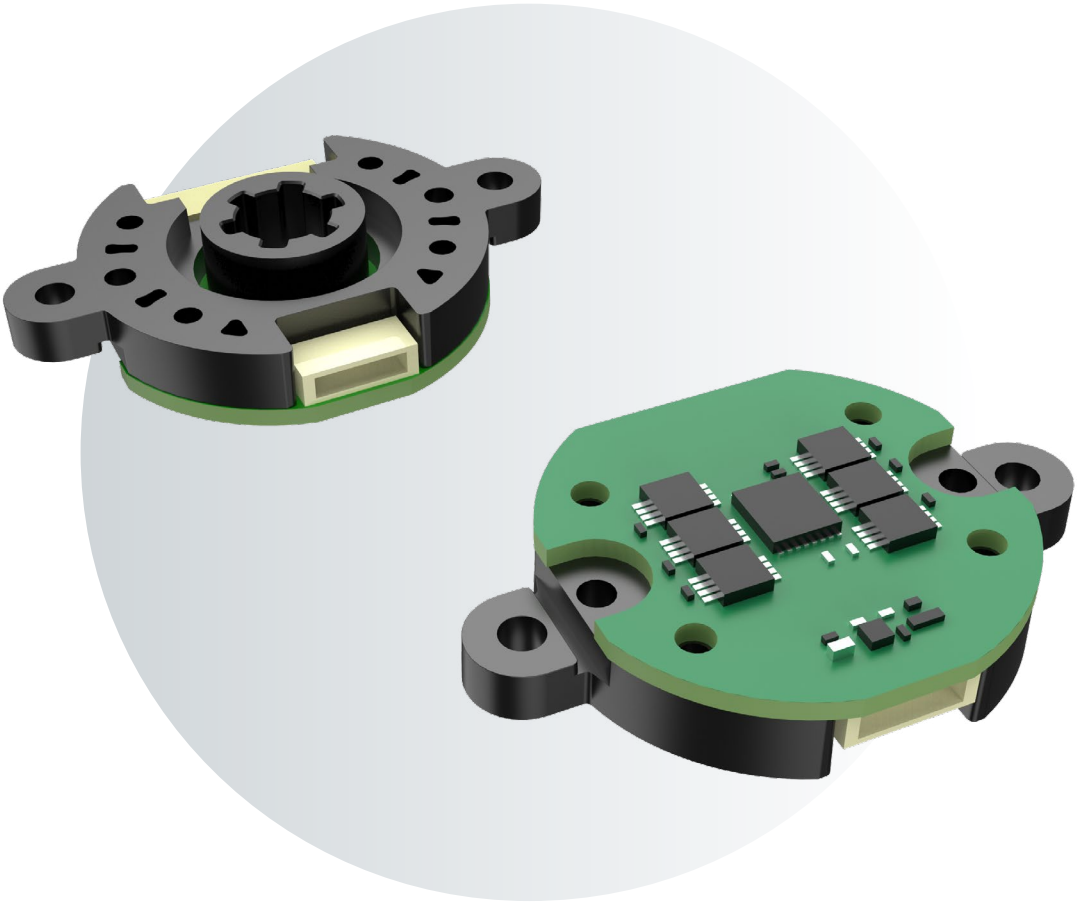

Magnetoelectric split-type ultra-thin incremental encoder

BMMIS35

Catalogue

1. Product Features 3
2. Naming Rule 3
3. Technical Parameter 4
4. Structural Drawings 5
5. Recommended Motor and Design Dimensions 5
6. Cable Definition 5
7. Installation Methods 6
8. Calibrate 6
9. Output Waveform Diagram 7
10. Installation Accessories 7
11. Specifications and Models 8

BMMIS35
Magnetoelectric split-type ultra-thin incremental encoder

1. Product Features

+ The installation requirement is low, and the installation and use cost is reduced.
+ Polar logarithm and resolution can be configured.



2. Naming Rule

B	M	M	I	S	3	5	B							B		P	W	D	0	0	
A							B			C				D		E	F				G

A	**Serial model No.**			
	This product is a servo magnetoelectric split ultra-thin incremental encoder with an outer diameter of 35mm			
B	**Shaft type**			
	B08	Straight shaft ϕ8mm		
C	**Resolution**			
	1~16384C/T			
D	**Output signal**			
	A：A + A- B+ B- Z+ Z-	B：A + A- B+ B- Z+ Z- U+ U- V+ V- W+ W-		
	Number of pole-pairs			
	1~16pole pairs (Configurable)			
E	**Output**			
	P：Long-line drive			
F	**Connection type**			
	WD00：Horizontal terminal 14 pins (double row, P=2mm)	WD0.5：		
G	**Other properties**			
	No special requirements; default configuration applies			

3. Technical Parameter

Performance						
Resolution		1~16384C/T Configurable				
Output signal		A, B two-phase signals with a 90° phase difference				
Interface						
Communication interface		Incremental				
Coding direction		CW (From the head direction)				
Electrical parameters						
Specifications		Temperature T=25°C				
		Minimum value		Typical value		Maximum value
Supply voltage		4.75V		5V		5.25V
Current of main power supply		20mA		50mA		80mA
Differential output level	High level	4.5V		— —		— —
	Low level	— —		— —		0.4V
Edge transition time		— —		— —		20ns
Insulation resistance		⩾ 50MΩ		— —		— —
Maximum response frequency		⩽ 250kHz				
Insulation withstand voltage		AC500V 1min				
Connection method		Horizontal terminal 14 pins (double row, P=2mm)				
Mechanical parameter						
Shaft diameter		straight shaft Φ8mm				
Maximum shaft speed		⩽ 7,200rpm				
Moment of inertia		0.23kg·mm²				
Output shaft allowable deviation	Shaft type	Axial	Axial float	Radial	Radial runout	Tilt Angle
	straight shaft	±0.2mm		0 -0.015		＜ 0.2°
Environmental parameter						
Operating temperature range		-20...105°C				
Relative humidity		⩽ 90% (40° C/21d, based on EN 60068-2-78); no condensation				
Vibration		10...55 Hz, amplitude 1.5mm; 55...2000Hz, acceleration 98m/s²; XYZ in three directions, 2 hours each, for a total of 6 hours.				
Mechanical shock		Impact acceleration: 980 m/s², 11 ms; 3 times per direction, totaling 18 times				
Electromagnetic compatibility		IEC61800-2/-3/-4				
Protection Class		Motor rear cover protection				

4. Structural Drawings

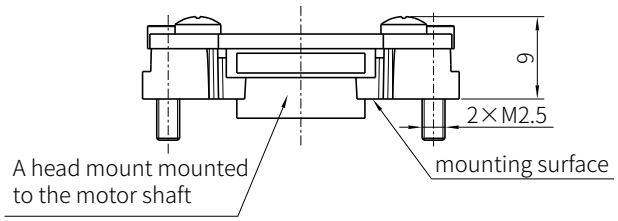

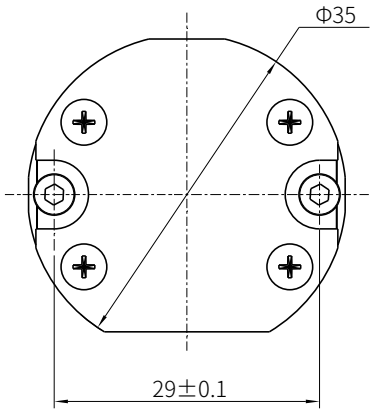

match 40 electrical machinery

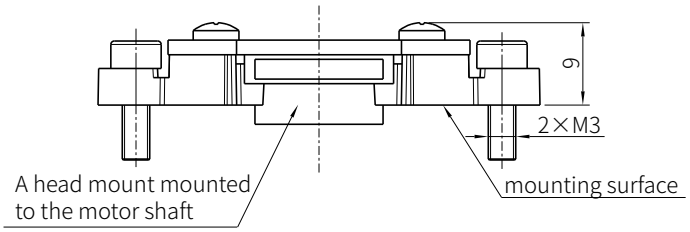

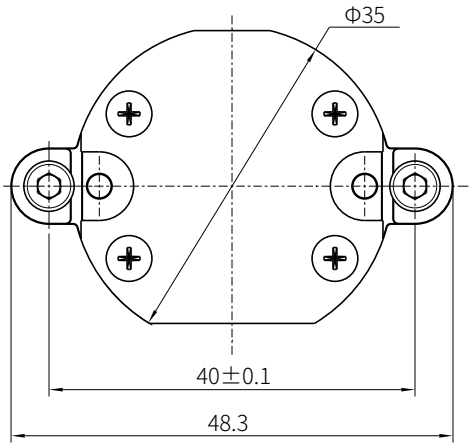

match 60 electrical machinery

5. Recommended Motor and Design Dimensions

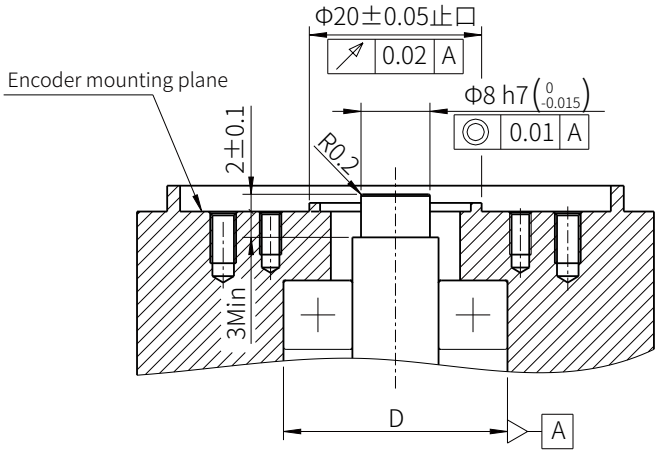

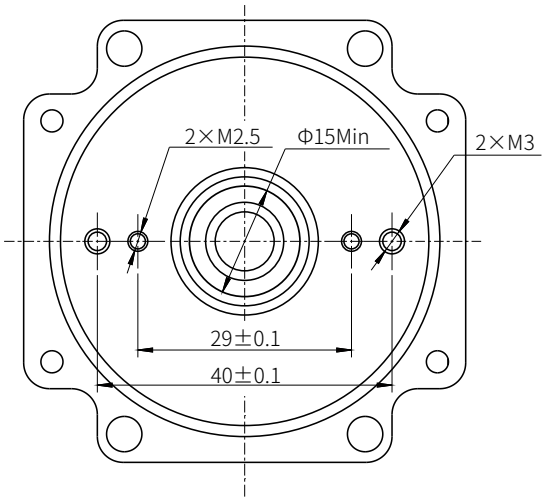

6. Cable Definition

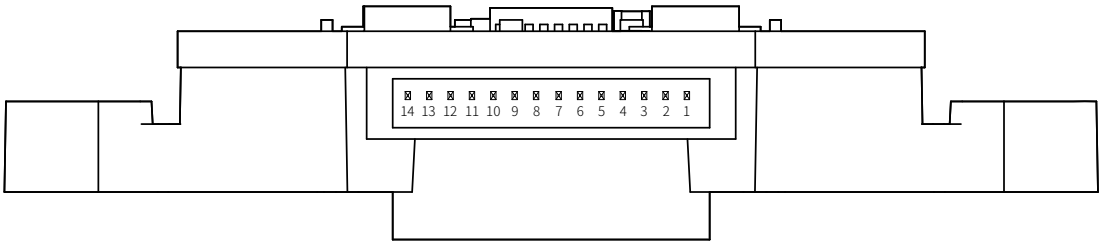

1 White	2 White Black	3 Gray	4 Gray Black	5 Brown	6 Brown Black	7 Red	8 Black	9 Yellow	10 Yellow Black	11 Green	12 Green Black	13 Blue	14 Blue Black
W+	W-	V+	V-	U+	U-	+5VDC	GND	Z+	Z-	B+	B-	A+	A-

7.Installation Steps

7.1 Magnetic head assembly installation

Installation tools and accessories: press-fitting fixture, Le Tai 648 glue, height gauge.

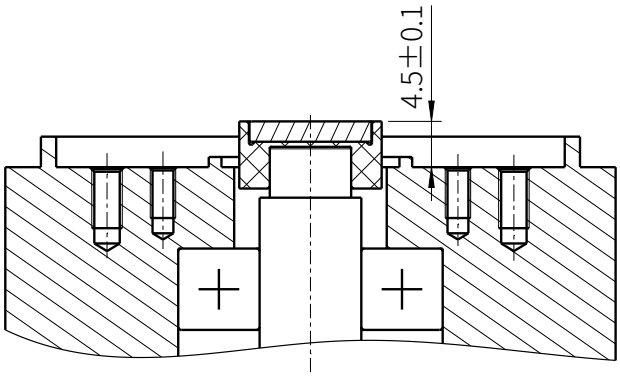

Installation Steps

1. Dip alcohol in a dust-free cloth, wipe the circumference and top surface of the motor shaft clean, and apply a small amount of Le Tai 648 glue at the two cleaned positions, so that the glue is evenly spread without glue piling and lack;
2. Take out the magnetic head assembly, place it on the top of the shaft, put it into place, apply a vertical press-fitting force of 1kgf with a special press-fitting fixture, and hold the pressure for 4 minutes after press-fitting in place;
3. After the pressure maintaining is completed, take out the motor containing the magnetic head assembly, and measure the distance from the magnet surface to the encoder mounting surface with a height gauge. The distance should be 4.5±0.1mm at multiple points. This step is used to check the correct installation height of the magnet, and check the parallelism between the surface of the magnet and the installation plane of the encoder after installation.
4. The motor components that have passed the inspection should be left standing for 24 hours before they can be used normally.

7.2 Installation of encoder module

The structural form (ex-factory state) of the encoder module is shown in the figure;

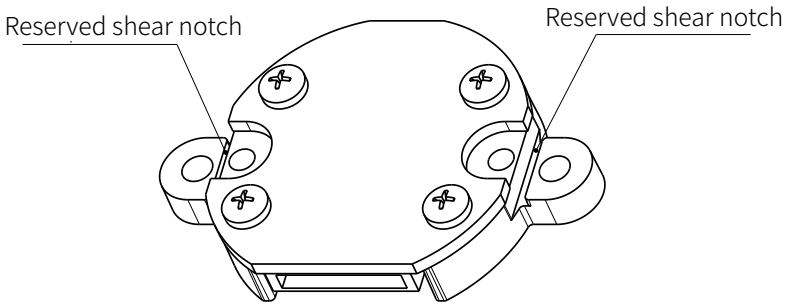

7.2.1 When the encoder module is adapted to the 40mm flange motor.

Pre-treatment: use the offset cutting pliers to reserve a cutting gap along the above figure, and cut off the mounting lugs on both sides.

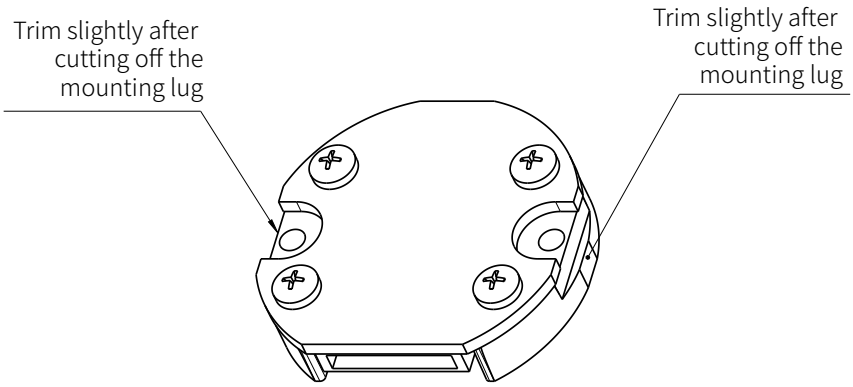

Align the processed encoder module with the motor stop, and press-fit it in place after positioning; The output port should be close to the motor power cable side;

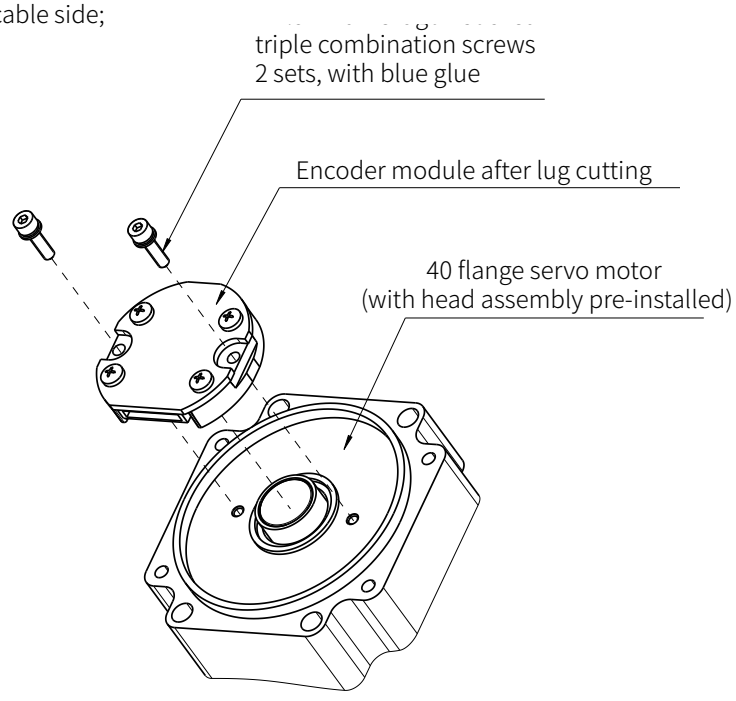

Use two sets of screws (hexagon socket head three combination screws M2.5×10) to pass through the fixing holes with a distance of 29 on the encoder module to fix the encoder to the mounting surface of the motor, and the torque is set to 2.5kgf·cm. Note that after the first screw touches the encoder module base lightly, go to the second screw and then go to the first screw to complete the tightening.

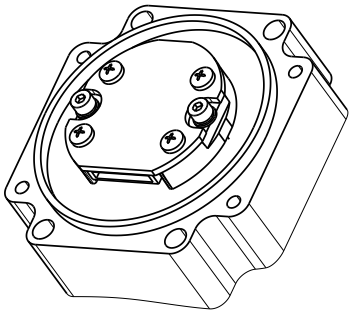

After the completion of the installation renderings.

7.2.2 When the encoder module is adapted to the 60mm flange motor.

Align the encoder module in the factory state with the motor stop, and press-fit it in place after positioning; The output port should be close to the motor power cable side;

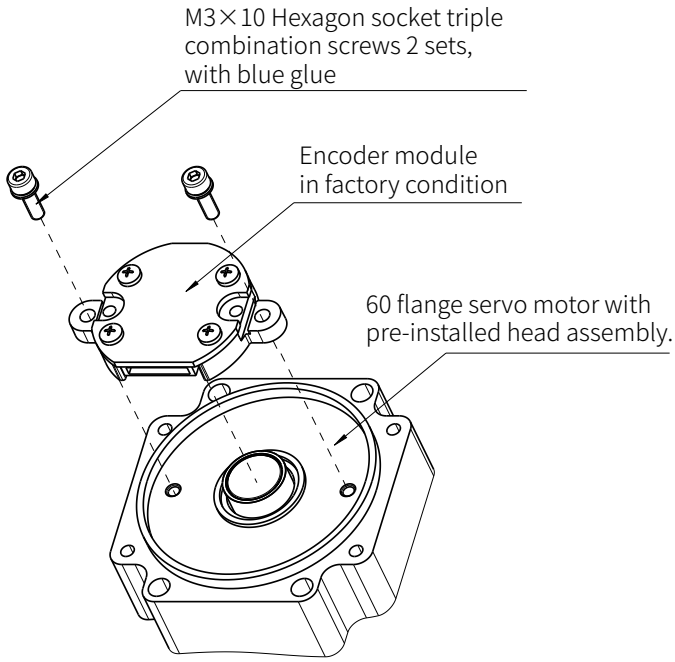

Use two sets of screws (hexagon socket head three combination screws M3×10) to pass through the fixing holes with a distance of 40 on the encoder module, and fix the encoder on the mounting surface of the motor, and the torque is set to 3 kgf cm. Note that after the first screw touches the encoder module base lightly, go to the second screw and then go to the first screw to complete the tightening.

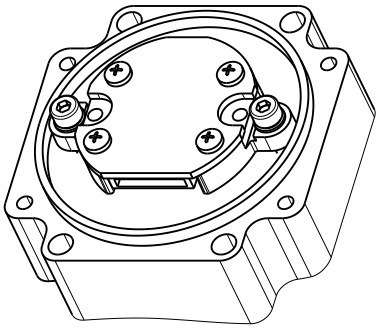

After the completion of the installation renderings.

8. Calibrate

This encoder supports calibration, and it only needs simple operation to complete calibration and zero adjustment, which takes less than 10 seconds (excluding clamping motor).

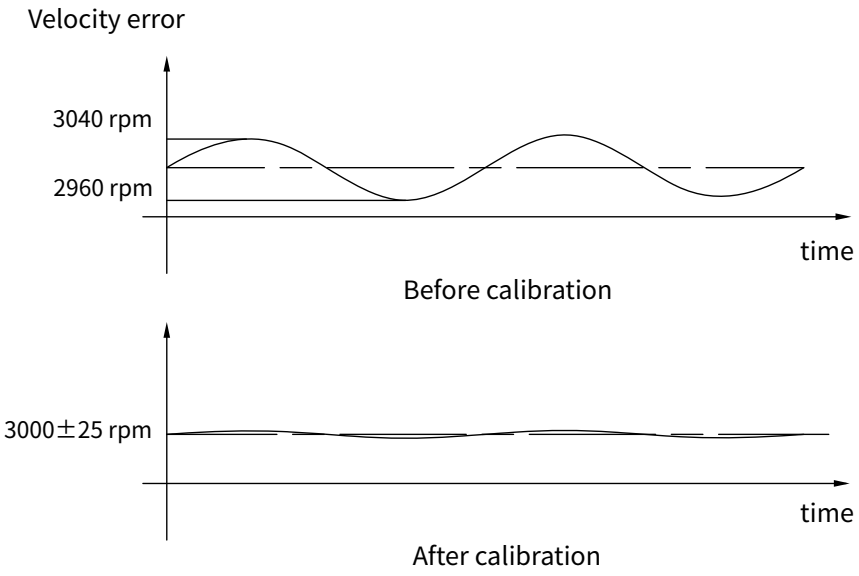

9. Output Waveform Diagram

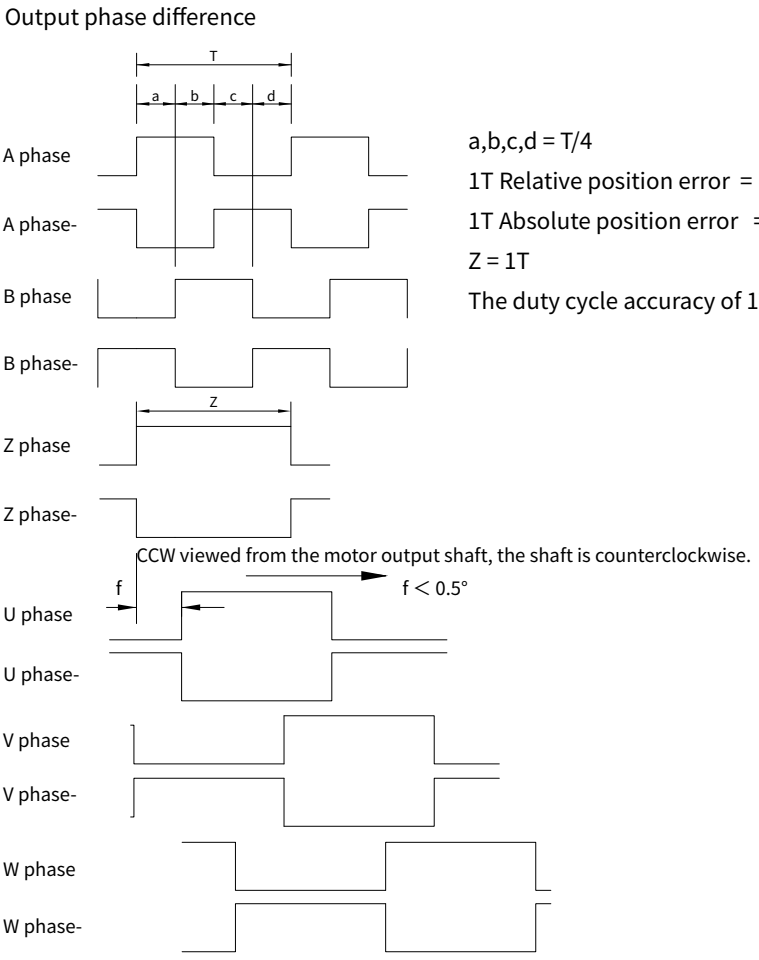

a,b,c,d = T/4

1T Relative position error = ±a/4

1T Absolute position error = ±a

Z = 1T

The duty cycle accuracy of 1T pulse is 5%

Output format RS422 compatible

10. Installation Accessories

Installation accessories	Description
M2.5×10 Hexagon socket triple combination screw× 2	Included in attachments
M3×10 Hexagon socket triple combination screw× 2	Included in attachments

11. Specifications and Models

Specification model	Description	Optional accessories
BMMIS35-B08-1024-B4-P-WD00	Straight shaft ϕ8mm，1024CT，Non-provincial line，4 pole pairs，Long-line drive	Cables
BMMIS35-B08-2500-B4-P-WD00	Straight shaft ϕ8mm，2500CT，Non-provincial line，4 pole pairs，Long-line drive	Cables
BMMIS35-B08-1024-B5-P-WD00	Straight shaft ϕ8mm，1024CT，Non-provincial line，5 pole pairs，Long-line drive	Cables
BMMIS35-B08-2500-B5-P-WD00	Straight shaft ϕ8mm，2500CT，Non-provincial line，5 pole pairs，Long-line drive	Cables

Felix-Wankel-Str.1, 85221 Dachau, Germany

Tel: +49 (0) 8131 337578-0
E-mail: info@tbfsensor.de

TBF Electronic Technology GmbH (German branch)

Building 6, Dazu Enterprise Bay,
8th yard of Liangshuihe 2nd street, BDA P.R.China

Tel: +86 10-67948976 67948916
Fax: +86 10-67948979

Beijing Tebeifu Electronic Technology Co., Ltd.

www.tbfsensor.com

For more customizable products, please contact us.