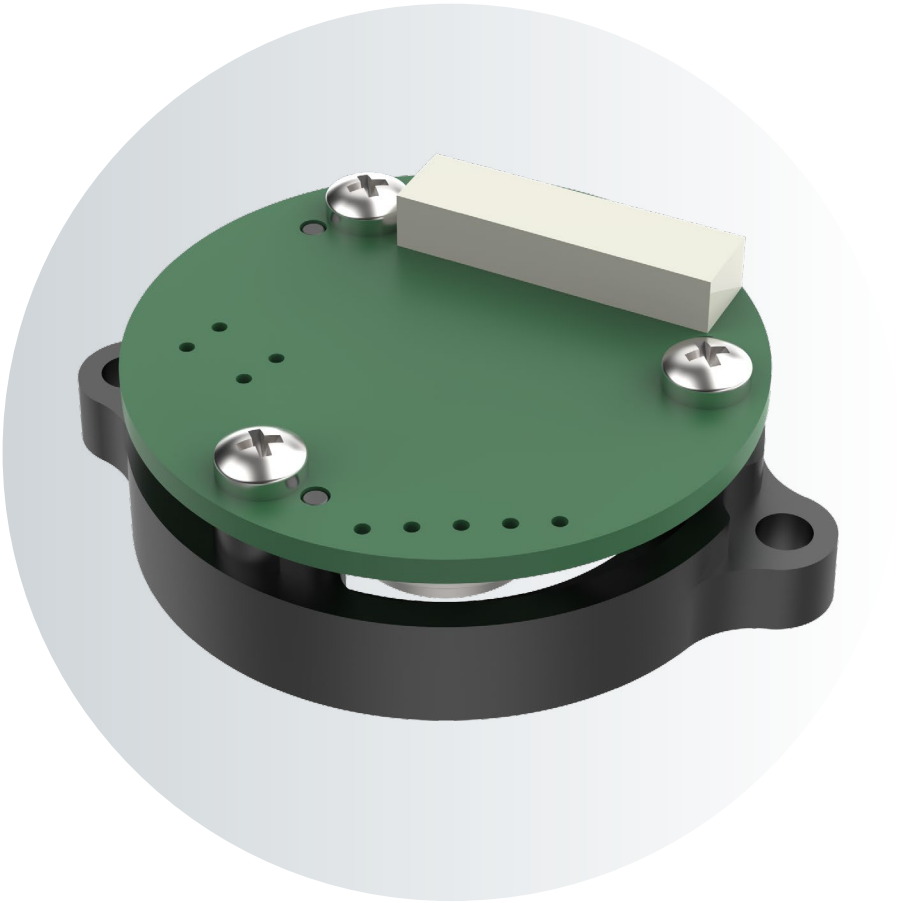

Magnetoelectric split-type incremental encoder

BMMIS36-A/B/C

Catalogue

1. Product Features 3
2. Naming Rule 3
3. Technical Parameter 4
4. Structural Drawings 5
5. Recommended Motor and Design Dimensions 6
6. Cable Definition 6
7. Installation Methods 6
8. Installation Steps 7
9. Lighting Description 8
10. Zeroing Procedure 8
11. Long-line drive output 10
12. Output Waveform Diagram 10
13. Installation Accessories 10
14. Specifications and Models 11

BMMIS36-A/B/C
Magnetoelectric split-type incremental encoder

1. Product Features

+ Motor capable of adapting to different sizes of output shaft designs
+ The installation requirement is low, and the installation and use cost is reduced.
+ Polar logarithm and resolution can be configured.



2. Naming Rule

B	M	M	I	S	3	6			B							B		P	W	D	0	0	
A							B		C				D			E		F	G				H

A	**Serial model No.**			
	This product is a servo magnetoelectric split incremental encoder with an outer diameter of 36mm			
B	**Base type**			
	A：Type A	B：Type B	C：Type C	No：No base
C	**Shaft type**			
	B06	Straight shaft ϕ6mm	B00	No magnetic head
	B08	Straight shaft ϕ8mm		
D	**Resolution**			
	1~16384C/T			
E	**Output signal**			
	A：A + A- B+ B- Z+ Z-	B：A + A- B+ B- Z+ Z- U+ U- V+ V- W+ W-		
	Number of pole-pairs			
	1~16pole pairs (Configurable)			
F	**Output**			
	P：Long-line drive			
G	**Connection type**			
	WD00：Horizontal terminal single row of 14 pins		WD0.5：	
H	**Other properties**			
	No special requirements; default configuration applies			

3.Technical Parameter

Performance						
Resolution		1~16384C/T Configurable				
Output signal		A, B two-phase signals with a 90° phase difference				
Interface						
Communication interface		Incremental				
Coding direction		CCW				
Electrical parameters						
Specifications		Temperature T=25°C				
		Minimum value		Typical value		Maximum value
Supply voltage		4.75V		5V		5.25V
Current of main power supply		20mA		50mA		80mA
Differential output level	High level	4.5V		— —		— —
	Low level	— —		— —		0.4V
Edge transition time		— —		— —		20ns
Insulation resistance		⩾ 50MΩ		— —		— —
Maximum response frequency		⩽ 250kHz				
Insulation withstand voltage		AC500V 1min				
Connection method		Horizontal terminal single row of 14 pins				
Mechanical parameter						
Shaft diameter		No magnetic head straight shaft Φ6/Φ8mm				
Maximum shaft speed		⩽ 7,200rpm				
Moment of inertia		0.23kg·mm²				
Output shaft allowable deviation	Shaft type	Axial	Axial float	Radial	Radial runout	Tilt Angle
	straight shaft	±0.2mm		±0.05mm		＜ 0.2°
Environmental parameter						
Operating temperature range		-20...105°C				
Relative humidity		⩽ 90% (40° C/21d, based on EN 60068-2-78); no condensation				
Vibration		10...55 Hz, amplitude 1.5mm; 55...2000Hz, acceleration 98m/s²; XYZ in three directions, 2 hours each, for a total of 6 hours.				
Mechanical shock		Impact acceleration: 980 m/s², 11 ms; 3 times per direction, totaling 18 times				
Electromagnetic compatibility		IEC61800-2/-3/-4				
Protection rating		Motor rear cover protection				

4. Structural Drawings

Outline dimension diagram of bare board

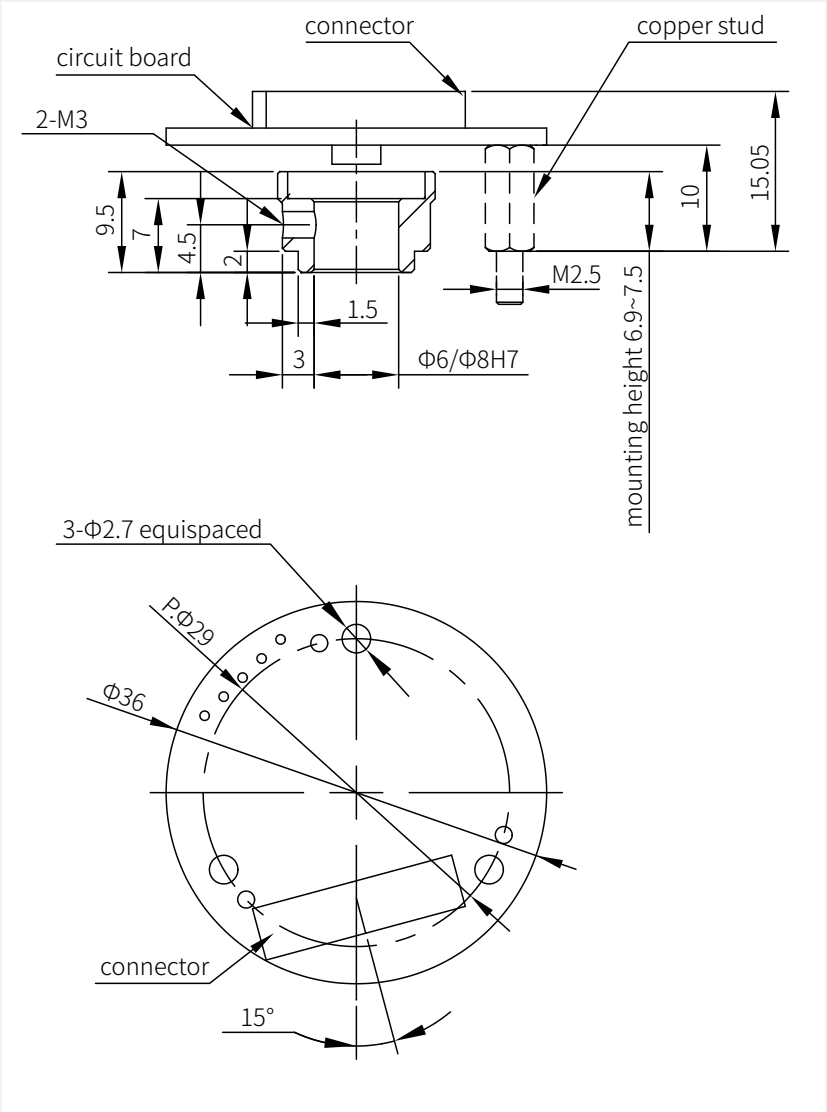

Base drawing	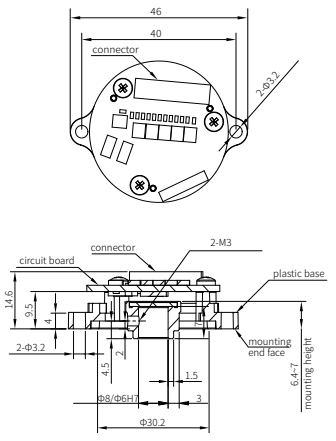	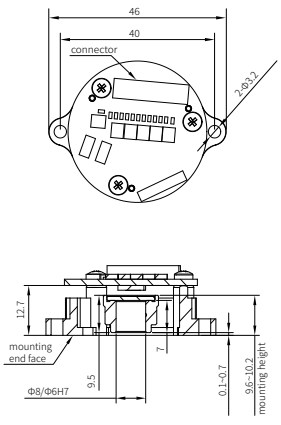	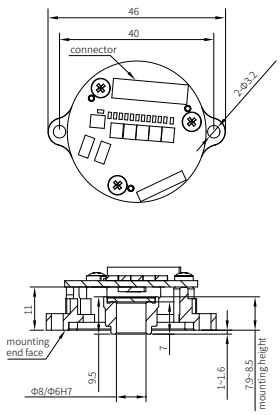
NO.	Type A	Type B	Type C

5. Recommended Motor and Design Dimensions

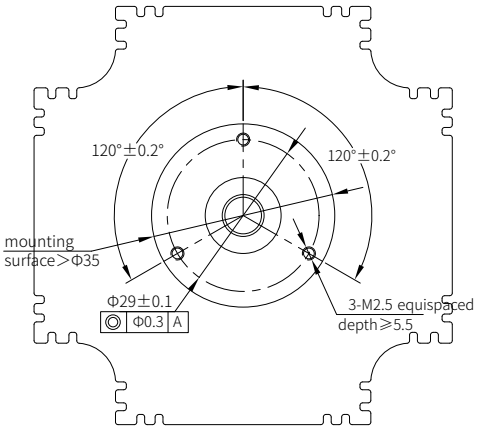

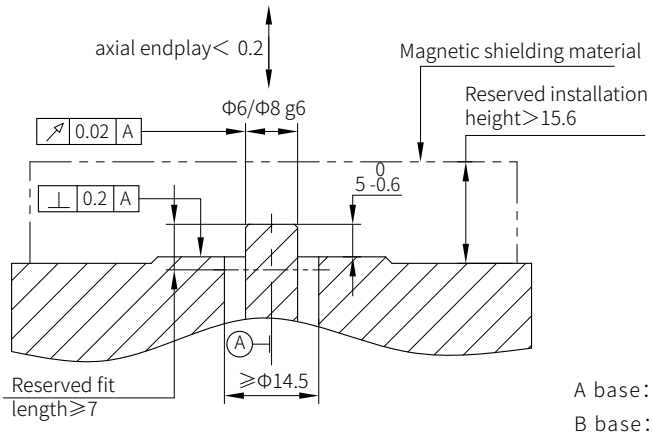

A base: L1 > 17 L2:4.5
B base: L1 > 20.5 L2:8
C base: L1 > 18.5 L2:6

6. Cable Definition

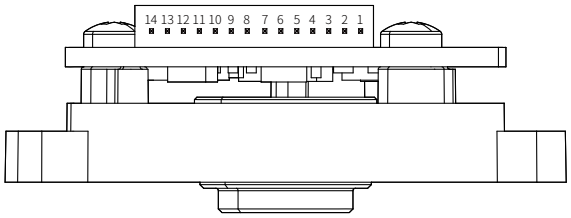

13 White	11 Gray	9 Brown	7 Yellow	5 Green	3 Blue	1 Red
W+	V+	U+	Z+	B+	A+	+5VDC
14 White Black	12 Gray Black	10 Brown Black	8 Yellow Black	6 Green Black	4 Blue Black	2 Black
W-	V-	U-	Z-	B-	A-	GND

7. Installation Methods

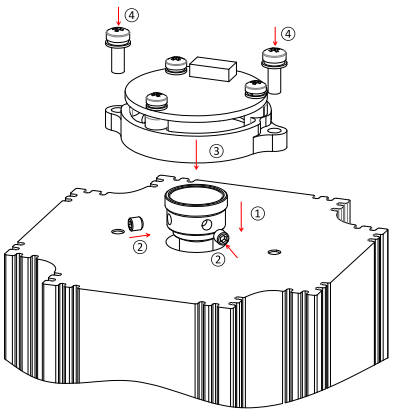

Use tools: SW1.5 hexagon torque wrench and cross torque wrench

Installation diagram

8. Installation Steps

1. Installation of the magnet rotating shaft: install the magnet rotating shaft into the installation jig, and use the installation jig to insert the hollow shaft part into the motor shaft, so that the end face of the jig is attached to the end face of the motor. (If no fixture is needed, just ensure that the distance between the end face of the magnet rotating shaft and the mounting surface is within the recommended size range).

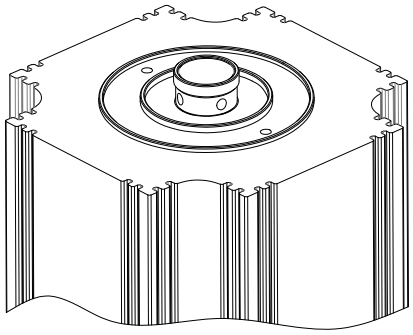

2. Fixing the set screw: according to the recommended installation size in the dimension drawing, screw the thread glue on the head of M3×3 set screw, screw the first set screw into the encoder shaft with SW1.5 Allen key torque wrench to make the set screw contact with the motor shaft (not locked at this time), screw the second set screw into the encoder shaft with 7 kg FCM torque; Then lock the first set screw with 7 kg FCM torque.

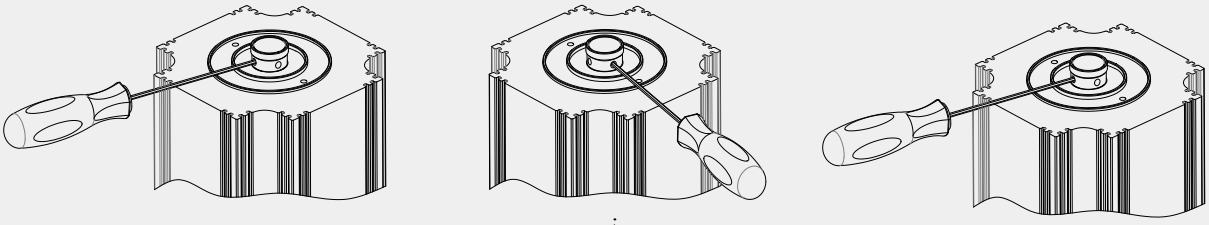

3. Installation of the encoder body: Place the encoder body on the installation surface, so that the end face of the base is attached to the installation surface, and the installation threaded holes are aligned. Note that the outlet direction of the connecting terminal is determined according to the direction suitable for wiring. It is forbidden to tap or press the encoder circuit board.

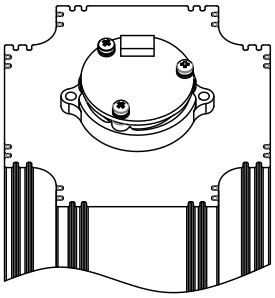

4. Fixing the encoder body: put some glue on the heads of two M3 combination screws and insert them into the mounting hole of the base of the body **(note here: if the terminal needs external grounding, insert the screws into the mounting hole of the base first)**, and lightly lock the first M3 combination screw with a cross torque wrench; Then the second M3 combination screw on the other side is locked with a torque of 8 ~ 10 kg FCM; Then the first M3 combination screw is locked with a torque of 8 ~ 10 kg FCM.

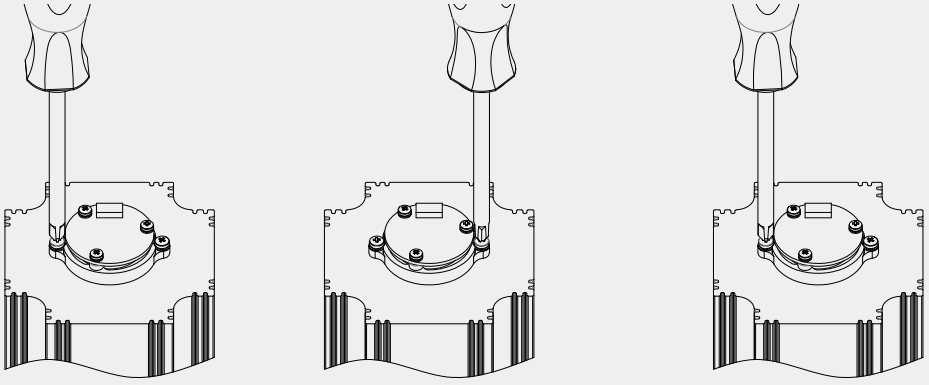

9. Lighting Description

The LED lamp on the board is a red lamp bead as standard, and its work can be divided into two modes:

1. Normal working mode. 2. EEPROM burning mode.

1. According to the different applications of customers, when in normal operation mode, the LED lights are turned off and don't work, and remain turned off frequently.

2. When in the EEPROM mode, the LED light will flash rapidly, with a flashing period of 12.5Hz and a flashing time of 8 seconds.

Working mode	Scintillation period
Programming mode	12.5Hz

Note: When the working mode is in the burning EEPROM mode, that is, the flash mode, the encoder is not allowed to be powered off, otherwise all the registers in the EEPROM will be cleared and will not work normally! !

10. Zeroing Procedure

Zeroing details

This encoder provides three ways to realize the zero calibration function of the current zero position of the shaft-locked motor.

1. Manual zero-setting 2. Automatic zero-setting at power-on 3. Zero-setting at serial port command.

The premise of the above zero-alignment modes is that the current motor is locked and cannot rotate. The schematic diagram is as follows:



Locked shaft zero adjustment

1）Specific operation

Direct current is applied to the motor to lock the shaft, and the shaft locking mode of the motor factory is determined according to the requirements of the driver.

2）Locked Shaft Phasing

There are 12 ways to lock the shaft, and each way corresponds to an electrical angle (0-360°).

Angle / Locked Shaft Phasing	Forward (Positive)	Reverse (Negative)
30	U	W
60	UV	W
90	V	W
120	V	UW
150	V	U
180	VW	U
210	W	U
240	W	UV
270	W	V
300	UW	V
330	U	V
360	U	VW

10.1 Manual zero adjustment

Two solder points MT1 are provided on the encoder PCB. Users can manually trigger the encoder to enter the manual zeroing mode by shorting the points with any conductive object such as tweezers, or with a shorting cap after pins are soldered onto these points.This mode features false-trigger detection on the corresponding pin. Brief accidental contact will not start the manual zeroing sequence; a continuous trigger longer than 100 ms is required to activate manual zeroing mode.

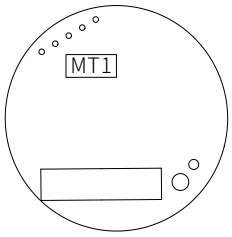

Verify manual zeroing status via fast LED flashing. Keep power supplied during flashing. The LED extinguishes upon completion, and the encoder resumes normal operation.

10.2 Power-on Zero Adjustment

The encoder features locked-shaft automatic zeroing on power-up, executed only at the initial power-on after factory shipment. Monitor the LED status after powering on to check if power-on auto zeroing is triggered.

Status 1: Power-on Automatic Zeroing

Rapid LED flashing. Power loss during flashing causes zeroing failure and invalid parameter configuration.

Status 2: No Automatic Zeroing on Power-up

LED stays off after power-up. The initial power-on zeroing has been finished and will not run again.

10.3 Command-based Zeroing

The encoder supports automatic zeroing via command. This function serves the following two purposes:

Clear the power-on zeroing status of the encoder that has completed power-on zeroing, so that the automatic zeroing sequence will be executed on its next power-up.

Command Zeroing requires an external serial cable. Zeroing is completed by sending commands from a host computer. Its effect is identical to the initial power-on zeroing mode.

11. Long Wire Drive Output

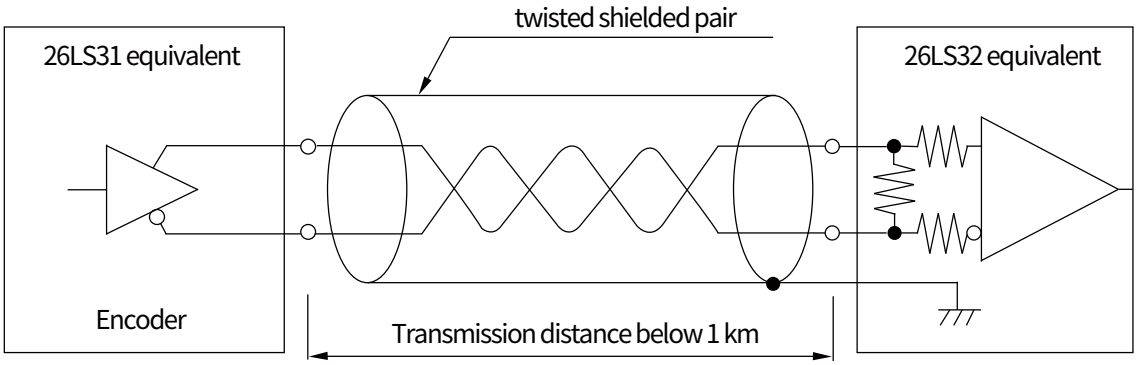

Note: Transmission distance depends on the usage environment.

12. Output Waveform Diagram

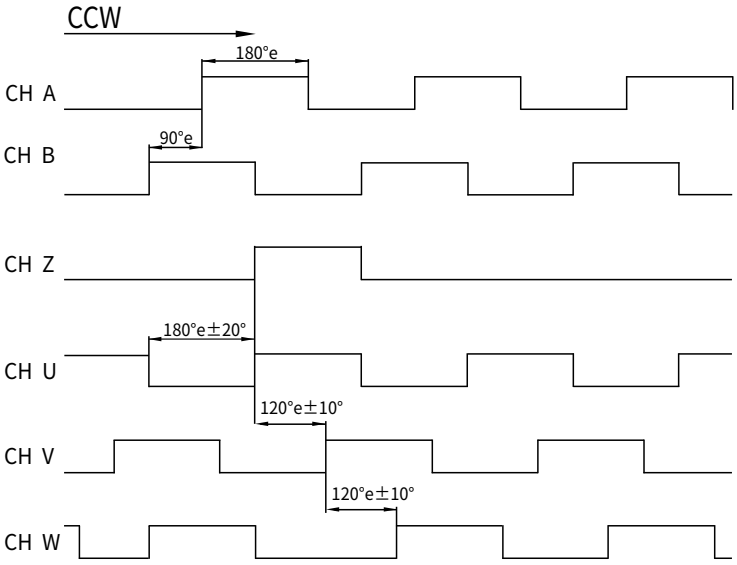

13. Installation Accessories

Installation Accessories	Description
M3 x 3 set screw x 2	included in accessories
M3 x 10 combination screw x 2	included in accessories

14. Specifications and Models

Specification model	Description	Optional accessories
BMMIS36-A-B06-1024-B4-P-WD00	A base，Straight shaft ϕ6mm，1024CT，non-wire-saving，4 pole pairs, long-wire drive	cables
BMMIS36-A-B06-2500-B4-P-WD00	A base，Straight shaft ϕ6mm，2500CT，non-wire-saving，4 pole pairs, long-wire drive	cables
BMMIS36-A-B06-1024-B5-P-WD00	A base，Straight shaft ϕ6mm，1024CT，non-wire-saving，5 pole pairs, long-wire drive	cables
BMMIS36-A-B06-2500-B5-P-WD00	A base，Straight shaft ϕ6mm，2500CT，non-wire-saving，5 pole pairs, long-wire drive	cables
BMMIS36-A-B08-1024-B4-P-WD00	A base，Straight shaft ϕ8mm，1024CT，non-wire-saving，4 pole pairs, long-wire drive	cables
BMMIS36-A-B08-2500-B4-P-WD00	A base，Straight shaft ϕ8mm，2500CT，non-wire-saving，4 pole pairs, long-wire drive	cables
BMMIS36- A-B08-1024-B5-P-WD00	A base，Straight shaft ϕ8mm，1024CT，non-wire-saving，5 pole pairs, long-wire drive	cables
BMMIS36-A-B08-2500-B5-P-WD00	A base，Straight shaft ϕ8mm，2500CT，non-wire-saving，5 pole pairs, long-wire drive	cables
BMMIS36-A-B00-1024-B4-P-WD00	A base，No magnetic head，1024CT，non-wire-saving，4 pole pairs, long-wire drive	cables
BMMIS36-A-B00-2500-B4-P-WD00	A base，No magnetic head，2500CT，non-wire-saving，4 pole pairs, long-wire drive	cables
BMMIS36-A-B00-1024-B5-P-WD00	A base，No magnetic head，1024CT，non-wire-saving，5 pole pairs, long-wire drive	cables
BMMIS36-A-B00-2500-B5-P-WD00	A base，No magnetic head，2500CT，non-wire-saving，5 pole pairs, long-wire drive	cables

Felix-Wankel-Str.1, 85221 Dachau, Germany

Tel: +49 (0) 8131 337578-0
E-mail: info@tbfsensor.de

TBF Electronic Technology GmbH (German branch)

Building 6, Dazu Enterprise Bay,
8th yard of Liangshuihe 2nd street, BDA P.R.China

Tel: +86 10-67948976 67948916
Fax: +86 10-67948979

Beijing Tebeifu Electronic Technology Co., Ltd.

www.tbfsensor.com

For more customizable products, please contact us.