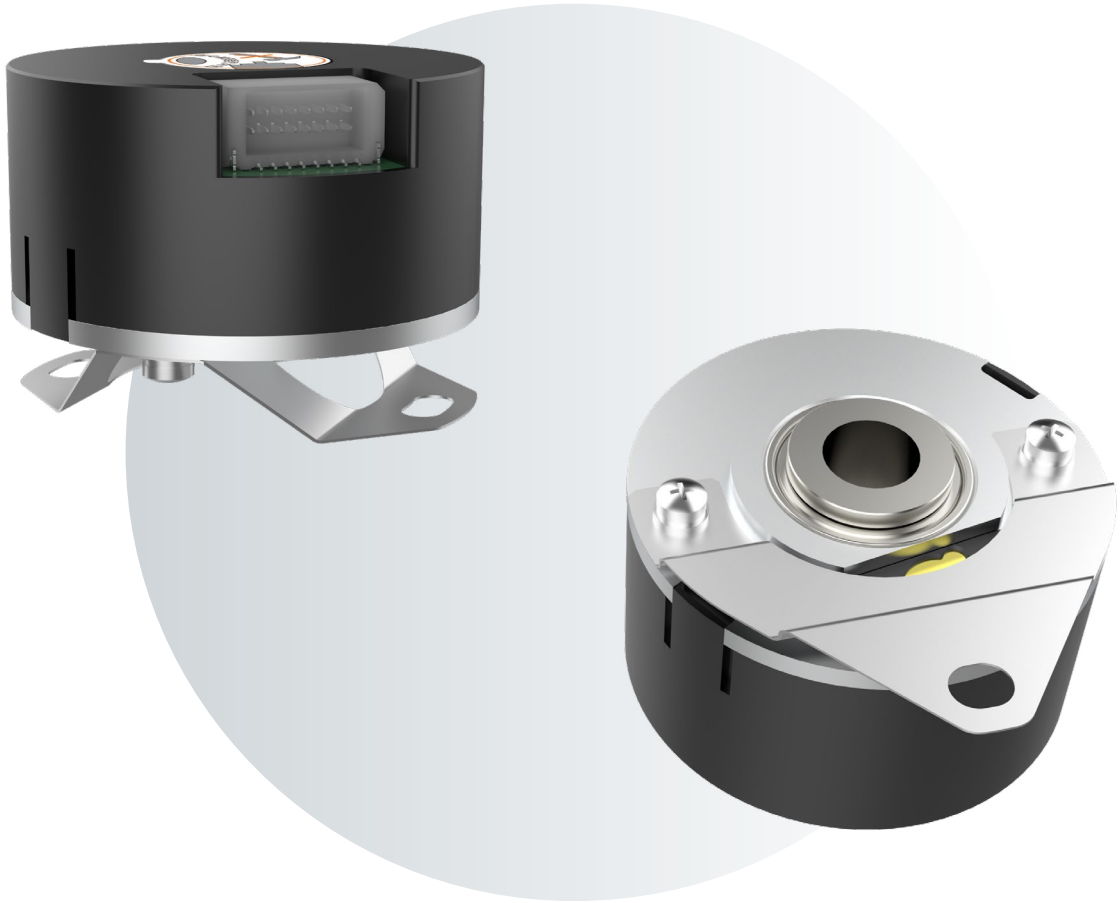

Optical integrated incremental encoder

BMTI35

Catalogue

1. Product Features 3
2. Naming Rule 3
3. Technical Parameter 4
4. Structural Drawings 5
5. Cable Definition 6
6. Long-line Drive Output 6
7. Output Waveform Diagram 6
8. Installation Accessories 7
9. Specifications and Models 7

BMTI35 Optical integrated incremental Encoder

1. Product Features

+ The unique housing protection design effectively prevents code disk contamination
+ Optical principle, high response speed
+ Multiple types available with high compatibility



2. Naming Rule

B M T I 3 5			B	P	W A 0 . 6 5	S P	
A	B	C	D	E	F	G	H

A	**Serial model No.**		
	This product is a servo optical integrated incremental encoder with an outer diameter of 35mm		
B	**Shaft type**		
	C07	Tapered shaft Φ7，taper 1:10	
C	**Resolution**		
	2500：2500C/T		
D	**Output signal**		
	A：A + A- B+ B- Z+ Z-	B：A + A- B+ B- Z+ Z- U+ U- V+ V- W+ W-	
	Number of pole-pairs		
	3：3 pole pairs	4：4 pole pairs	5：5 pole pairs
E	**Output**		
	P：Long-line drive		
F	**Cable exit method**		
	WA0.65：Horizontal terminal outlet 0.65m		
G	**Spring clip type**		
	SP2902/SP4302		
H	**Other properties**		
	No special requirements. Default		

3. Technical Parameter

Performance						
Lines per revolution		2500C/T				
Output signal		A, B two-phase signals with a 90° phase difference				
Interface						
Communication interface		Incremental				
Coding direction		CCW				
Electrical parameters						
Specifications		Temperature T=25°C				
		Minimum value		Typical value		Maximum value
Supply voltage		4.75V		5V		5.25V
Current of main power supply		— —		9mA		— —
Differential output level	High level	2V		— —		— —
	Low level	— —		— —		0.4V
Edge transition time		— —		— —		100ns
Insulation resistance		10MΩ		— —		— —
Maximum response frequency		⩽ 250kHz				
Insulation withstand voltage		AC500V 1min				
Connection method		15-pin straight-out cable (optional)				
Mechanical parameter						
Shaft diameter		Tapered shaft Φ7mm taper 1:10				
Weight		Approximately 0.04 kg (excluding the connecting cable)				
Maximum shaft speed		⩽ 6,000rpm				
Rotor angular acceleration		10,000 rad/s^2				
Moment of inertia		0.68kg·mm^2				
Starting torque (20°C)		⩽ 0.005N·m				
Output shaft allowable deviation	shaft type	Axial	Axial float	Radial	Radial runout	Tilt Angle
	Tapered shaft	±0.3mm	＜ 0.2mm	±0.1mm	＜ 0.05mm	＜ 0.1°
Environmental parameter						
Operating temperature range		-40...105°C				
Storage temperature range		-40...120°C				
Relative humidity		⩽ 90% (40° C/21d, based on EN 60068-2-78); no condensation				
Vibration		10...55 Hz, amplitude 1.5mm; 55...2000Hz, acceleration 98m/s^2; XYZ in three directions, 2 hours each, for a total of 6 hours.				
Mechanical shock		Impact acceleration: 980 m/s^2, 11 ms; 3 times per direction, totaling 18 times				
Electromagnetic compatibility		IEC61000-4				
Protection rating		IP40				

4. Structural Drawings

SP2902 spring clips outline dumensuon drawing

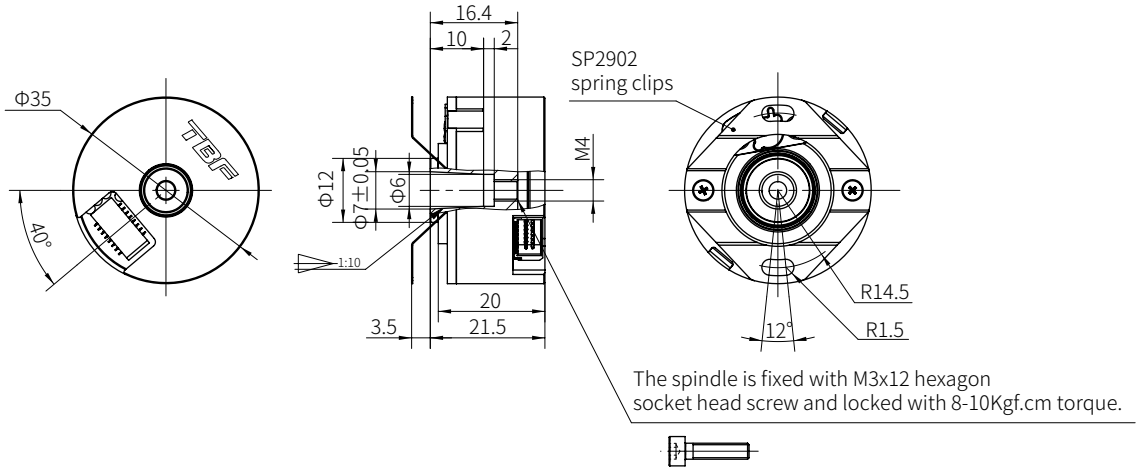

SP4302 spring clips outline dumensuon drawing

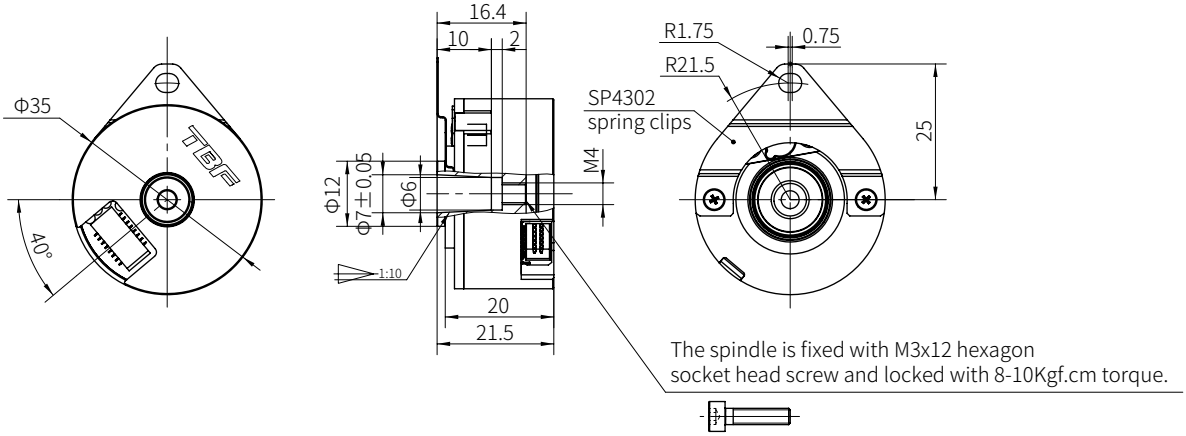

Spring clip component drawings	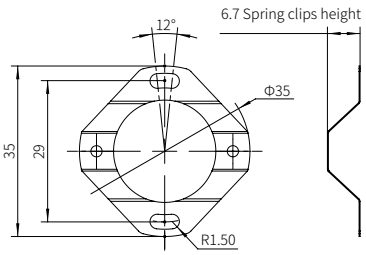	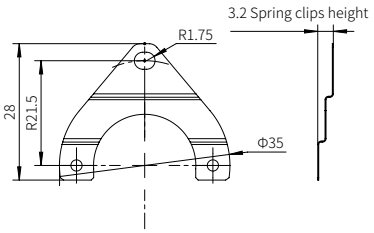
NO.	SP2902	SP4302
Cable	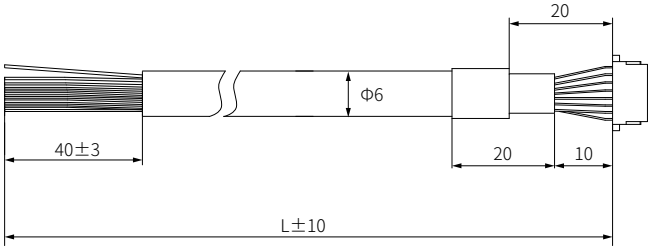	

5. Cable Definition

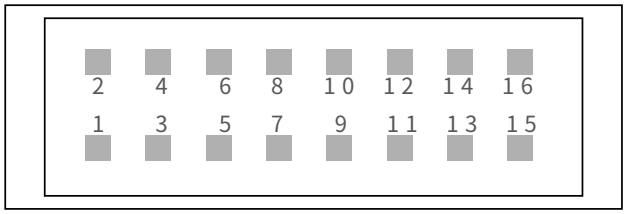

2 / Black	4 / Blue Black	6 / Green Black	8 / Yellow Black	10 / Brown Black	12 / Gray Black	14 / White Black	16 / Black
GND	A-	B-	Z-	U-	V-	W-	PE
1 / Red	3 / Blue	5 / Green	7 / Yellow	9 / Brown	11 / Gray	13 / White	15
+5V	A+	B+	Z+	U+	V+	W+	NC

6. Long Wire Drive Output

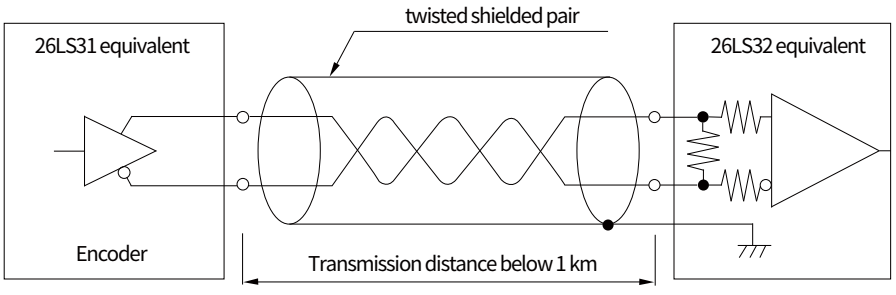

Note: Transmission distance depends on the usage environment.

7. Output Waveform Diagram

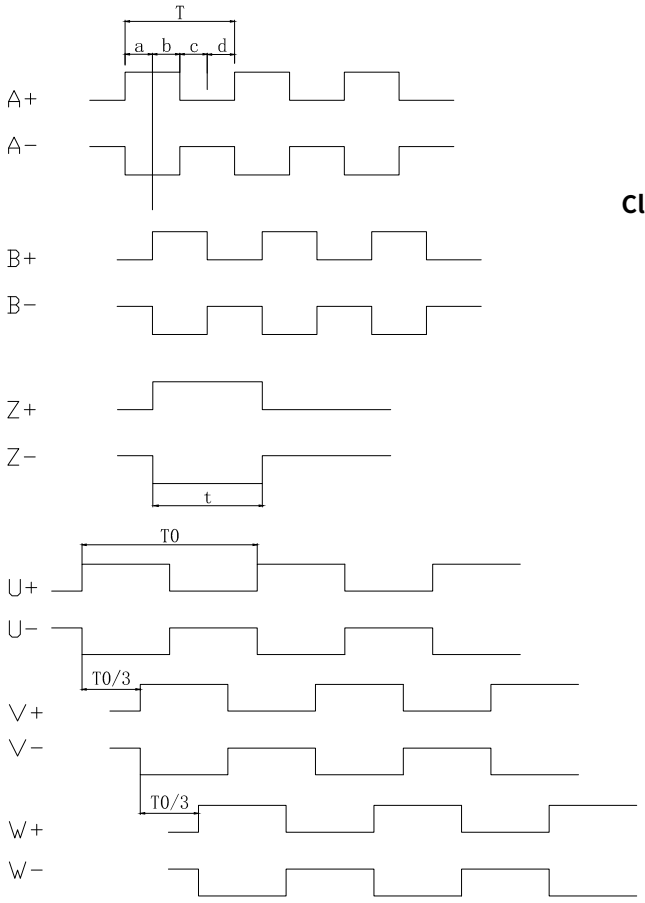

C≤±1° (mechanical angle)

a、b、c、d=T/4±T/8　　t=T±T/2

T=360°/2500

Clockwise from the direction of spring clips

8. Installation Accessories

Tapered shaft	
Accessories name	Description
Dust-Proof Sticker	included in accessories
Cables and Spring Clips	Customer options

9. Specifications and Models

Specification model	**Description**	**Optional accessories**
BMTI35-C07-2500-B5-P-WA0.65-SP2902	Tapered shaft ϕ7mm，2500CT，non-wire-saving， 5 pole pairs, long-wire drive，with SP2902 spring clips	Spring clips, cables
BMTI35-C07-2500-B5-P-WA0.65-SP4302	Tapered shaft ϕ7mm，2500CT，non-wire-saving， 5 pole pairs, long-wire drive，with SP4302 spring clips	Spring clips, cables

Felix-Wankel-Str.1, 85221 Dachau, Germany

Tel: +49 (0) 8131 337578-0
E-mail: info@tbfsensor.de

TBF Electronic Technology GmbH (German branch)

Building 6, Dazu Enterprise Bay,
8th yard of Liangshuihe 2nd street, BDA P.R.China

Tel: +86 10-67948976 67948916
Fax: +86 10-67948979

Beijing Tebeifu Electronic Technology Co., Ltd.

www.tbfsensor.com

For more customizable products, please contact us.