

Optical integrated incremental encoder

BMTI44

Catalogue

1. Product Features 3
2. Naming Rule 3
3. Technical Parameter 4
4. Structural Drawings 5
5. Recommended Motor Terminal Design Dimensions 6
6. Cable Definition 6
7. Installation Methods 7
8. Installation Steps 8
9. Long-line Drive Output 10
10. Output Waveform Diagram 10
11. Installation Accessories 10
12. Specifications and Models 11

BMTI44 Optical integrated incremental Encoder

1. Product Features

+ The unique housing protection design effectively prevents code disk contamination
+ Optical principle, high response speed
+ Multiple types available with high compatibility

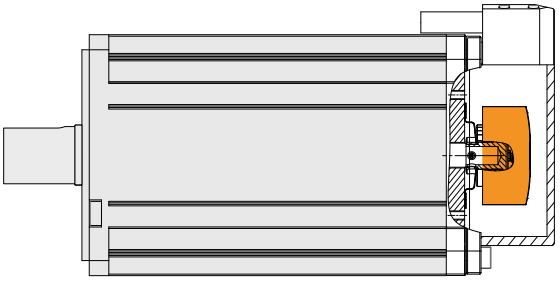

2. Naming Rule

| B | M | T | I | 4 | 4 | | |

3. Technical Parameter

Performance						
Lines per revolution		1024/2500/5000 C/T				
Output signal		A, B two-phase signals with a 90° phase difference				
Interface						
Communication interface		Incremental				
Coding direction		CCW				
Electrical parameters						
Specifications		Temperature T=25°C				
		Minimum value		Typical value		Maximum value
Supply voltage		4.75V		5V		5.25V
Current of main power supply		— —		9mA		— —
Differential output level	High level	2.4V		— —		— —
	Low level	— —		— —		0.5V
Edge transition time		— —		— —		100ns
Insulation resistance		10MΩ		— —		— —
Maximum response frequency		⩽ 250kHz				
Insulation withstand voltage		AC500V 1min				
Connection method		15-pin straight-out cable (optional)				
Mechanical parameter						
Shaft diameter		tapered shaft Φ9mm taper 1:10 straight shaft Φ6/Φ8mm				
Weight		Approximately 0.06 kg (excluding the connecting cable)				
Maximum shaft speed		⩽ 7,200rpm				
Rotor angular acceleration		10,000rad/s^2				
Moment of inertia		0.68kg·mm^2				
Starting torque (20°C)		⩽ 0.005N·m				
Output shaft allowable deviation	shaft type	Axial	Axial float	Radial	Radial runout	Tilt Angle
	tapered shaft	±0.3mm	＜ 0.2mm	±0.1mm	＜ 0.05mm	＜ 0.1°
	straight shaft	±0.5mm	＜ 0.1mm	±0.1mm	＜ 0.01mm	＜ 0.1°
Environmental parameter						
Operating temperature range		-40...105°C				
Storage temperature range		-40...120°C				
Relative humidity		⩽ 90% (40° C/21d, based on EN 60068-2-78); no condensation				
Vibration		10...55 Hz, amplitude 1.5mm; 55...2000Hz, acceleration 98m/s^2; XYZ in three directions, 2 hours each, for a total of 6 hours.				
Mechanical shock		Impact acceleration: 980 m/s^2, 11 ms; 3 times per direction, totaling 18 times				
Electromagnetic compatibility		IEC61000-4				
Protection rating		IP40				

4. Structural Drawings

Tapered Shaft

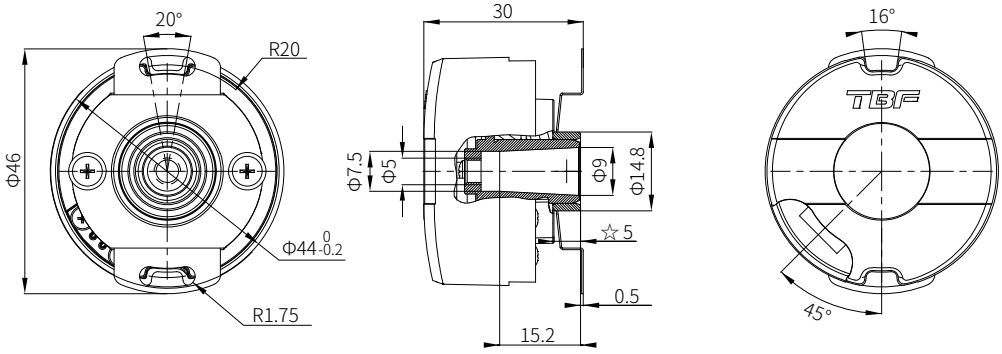

☆ The size is the distance between the spring plate mounting surface and the spindle end face.

Straight Shaft

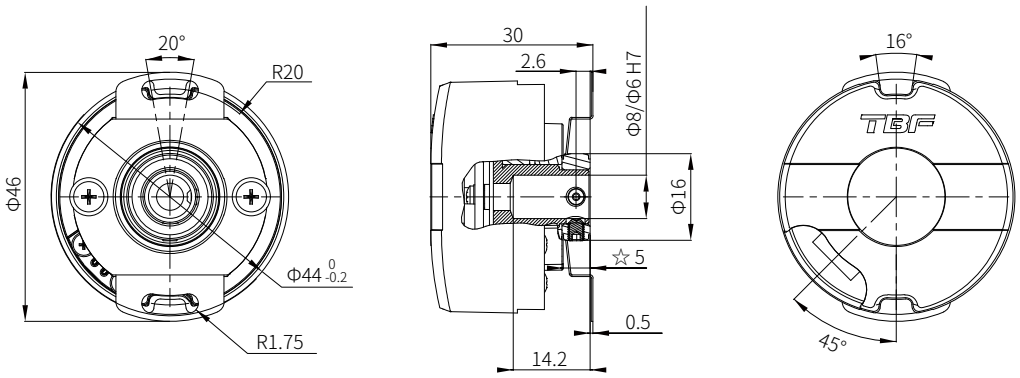

☆ The size is the distance between the spring plate mounting surface and the spindle end face.

Spring clip component drawings	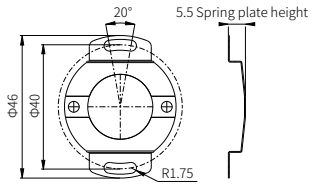	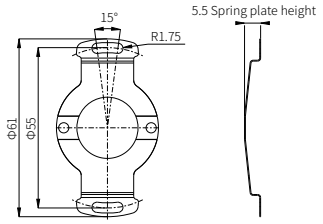	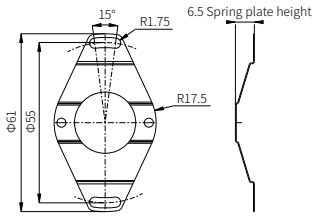
Number	SP4002	SP5501	SP5502
Cable	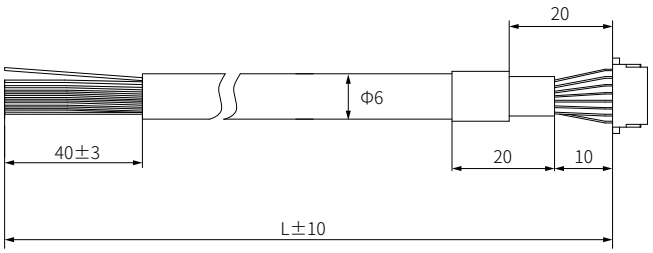		

5. Recommended Motor Terminal Design Dimensions

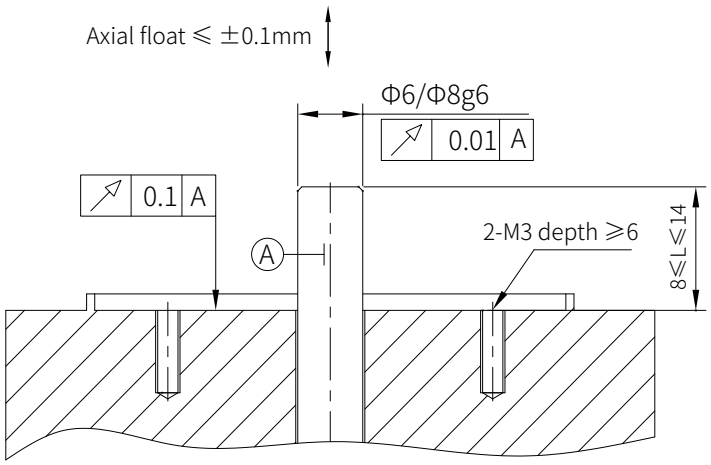

Straight Shaft

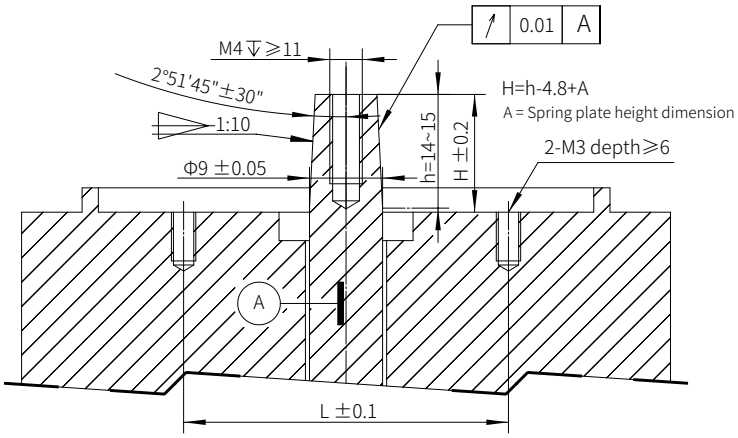

L = Dimension of spring plate mounting hole

Tapered Shaft

6. Cable Definition

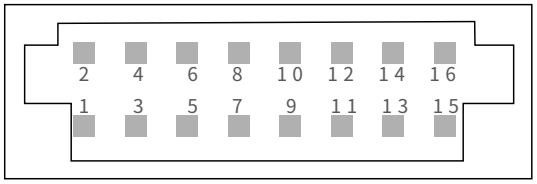

2 / Black	4 / Blue Black	6 / Green Black	8 / Yellow Black	10 / Brown Black	12 / Gray Black	14 / White Black	16 / Black
GND	A-	B-	Z-	U-	V-	W-	PE
1 / Red	3 / Blue	5 / Green	7 / Yellow	9 / Brown	11 / Gray	13 / White	15
+5V	A+	B+	Z+	U+	V+	W+	NC

7. Installation Methods

7.1 Tapered bore shaft installation diagram

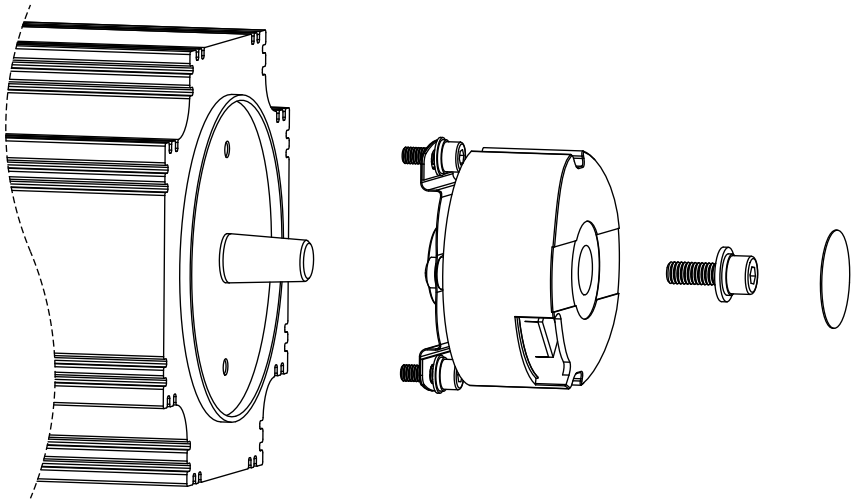

Installation accessories

2.5mm (AF) metric hex torque wrench
3.0mm (AF) metric hex torque wrench

7.2 Straight shaft installation diagram

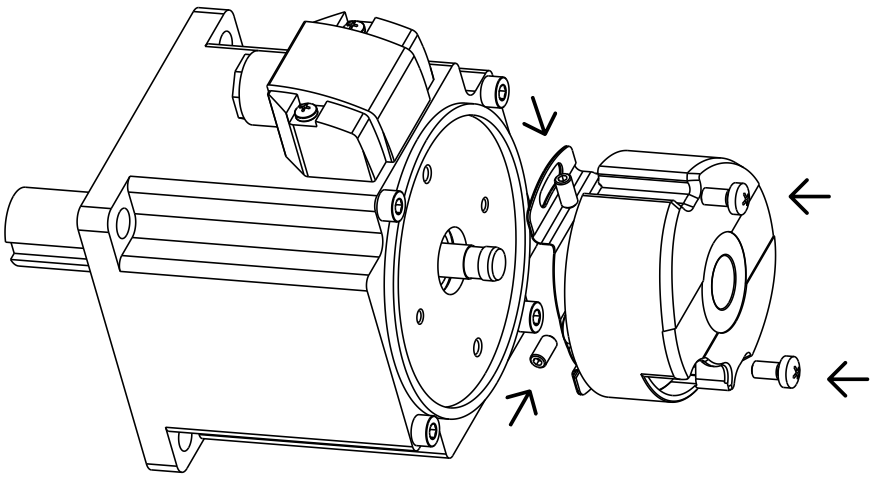

Install accessories

1.5mm (AF) metric hex torque wrench
2.5mm (AF) metric hex torque wrench

8. Installation Steps

8.1 Tapered bore shaft installation procedure

1. Place the encoder onto the motor shaft, ensuring good fit without tilting or looseness. Check motor dimensions and for any crushing injuries or foreign objects if necessary. Do not force the encoder down or strike it during installation.

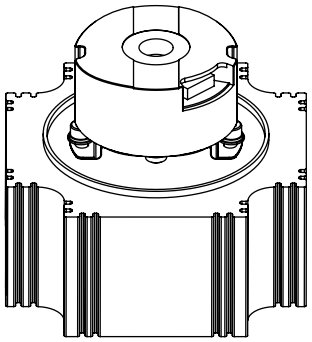

2. Insert the M4 hex socket head cap combination screw from above into the encoder shaft and tighten with the corresponding hex key torque wrench, recommended torque 16~20 kgf.cm.

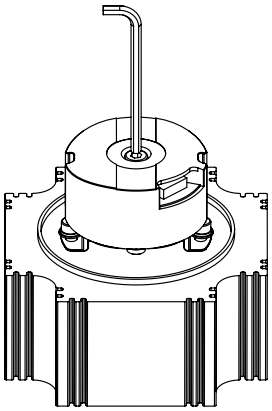

3. Lightly tighten one side of the single M3 combination screw with the corresponding hex key torque wrench, then lightly tighten the other side. Then, sequentially tighten both sides with 8~10 kgf.cm torque.

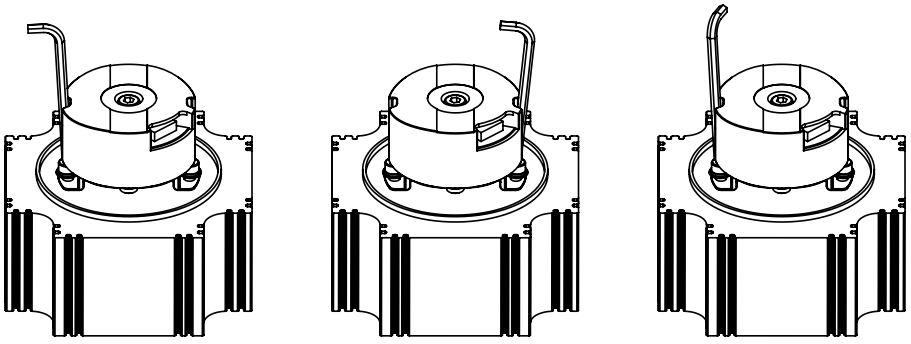

4. Affix the new dust-proof sticker on top of the rear cover.

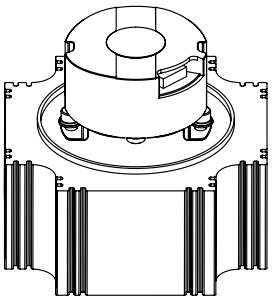

8.2 Straight shaft installation steps

1. Thread the encoder onto the motor shaft, ensuring the bottom surface of the connecting plate fits flush with the motor end rear cover. The encoder should thread on smoothly; if obstructed, check motor shaft diameter and for any crushing injuries. Do not force the encoder down, strike, or press the encoder circuit board during installation

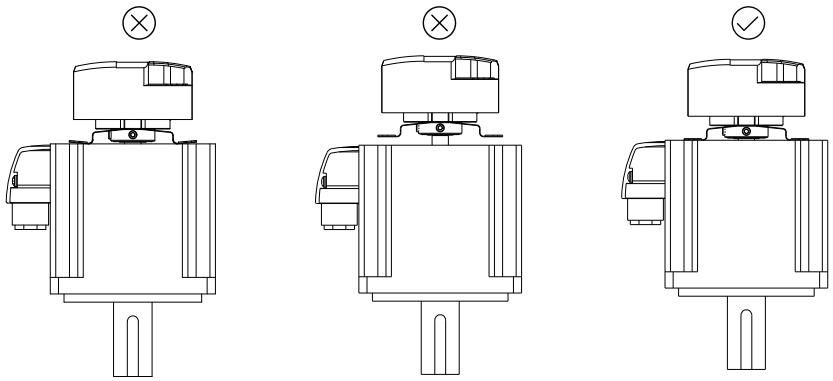

2. Dip the head of the M3X4 recessed end set screw in thread locker and lightly tighten the first set screw into the encoder using the corresponding hex key torque wrench to contact the motor shaft; insert the second set screw into the encoder shaft and tighten with 7 kgf.cm torque; then tighten the first screw with 7 kgf.cm torque.

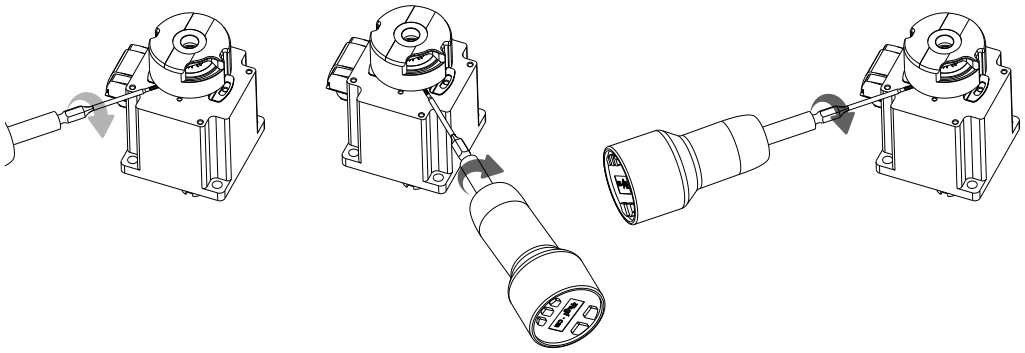

3. Lightly tighten one side of the single M3 combination screw with the corresponding hex key torque wrench, then lightly tighten the other side. Then, sequentially tighten both sides with 8~10 kgf.cm torque.

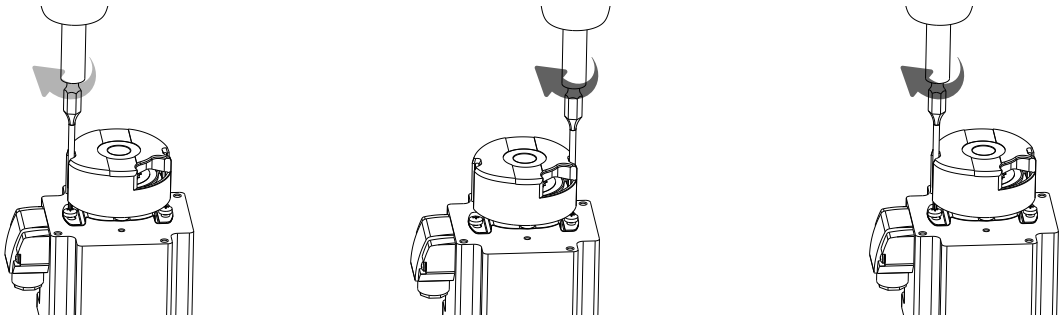

9. Long Wire Drive Output

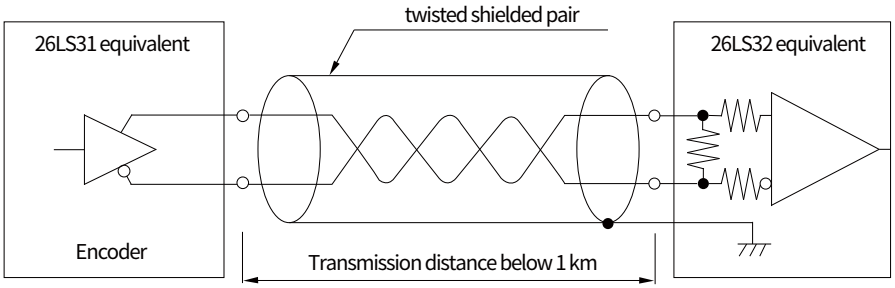

Note: Transmission distance depends on the usage environment.

10. Output Waveform Diagram

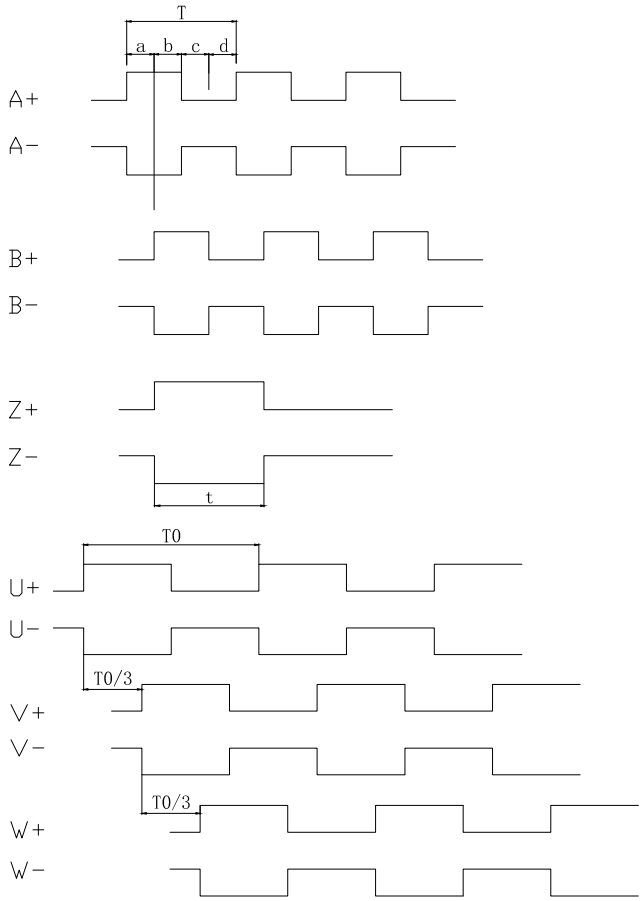

C≤±1° (mechanical angle)

a、b、c、d=T/4±T/8　　t=T±T/2

T=360°/2500

11. Installation Accessories

Tapered shaft		Straight shaft	
Accessories name	Description	Accessories name	Description
M4 x 18 combination screw x 1	included in accessories	M3 x 4 set screws x 2	included in accessories
M3 x 6 combination screw x 4	included in accessories	M3 x 6 combination screw x 4	included in accessories
Dust-Proof Sticker	included in accessories	Cables and Spring Clips	Customer options
Cables and Spring Clips	Customer options		

12. Specifications and Models

Specification model	Description	Optional accessories
BMTI44-B06-1024-B4-P-WA0.5-SP4002	Straight shaft, ϕ6mm, 1024CT, non-wire-saving, 4 pole pairs, long-wire drive	Spring clips, cables
BMTI44-B06-2500-B4-P-WA0.5-SP4002	Straight shaft, ϕ6mm, 2500CT, non-wire-saving, 4 pole pairs, long-wire drive	Spring clips, cables
BMTI44-B06-5000-B4-P-WA0.5-SP4002	Straight shaft, ϕ6mm, 5000CT, non-wire-saving, 4 pole pairs, long-wire drive	Spring clips, cables
BMTI44-B06-1024-B5-P-WA0.5-SP4002	Straight shaft, ϕ6mm, 1024CT, non-wire-saving, 5 pole pairs, long-wire drive	Spring clips, cables
BMTI44-B06-2500-B5-P-WA0.5-SP4002	Straight shaft, ϕ6mm, 2500CT, non-wire-saving, 5 pole pairs, long-wire drive	Spring clips, cables
BMTI44-B06-5000-B5-P-WA0.5-SP4002	Straight shaft, ϕ6mm, 5000CT, non-wire-saving, 5 pole pairs, long-wire drive	Spring clips, cables
BMTI44-B08-1024-B4-P-WA0.5-SP4002	Straight shaft, ϕ8mm, 1024CT, non-wire-saving, 4 pole pairs, long-wire drive	Spring clips, cables
BMTI44-B08-2500-B4-P-WA0.5-SP4002	Straight shaft, ϕ8mm, 2500CT, non-wire-saving, 4 pole pairs, long-wire drive	Spring clips, cables
BMTI44-B08-5000-B4-P-WA0.5-SP4002	Straight shaft, ϕ8mm, 5000CT, non-wire-saving, 4 pole pairs, long-wire drive	Spring clips, cables
BMTI44-B08-1024-B5-P-WA0.5-SP4002	Straight shaft, ϕ8mm, 1024CT, non-wire-saving, 5 pole pairs, long-wire drive	Spring clips, cables
BMTI44-B08-2500-B5-P-WA0.5-SP4002	Straight shaft, ϕ8mm, 2500CT, non-wire-saving, 5 pole pairs, long wire drive	Spring clips, cables
BMTI44-B08-5000-B5-P-WA0.5-SP4002	Straight shaft, ϕ8mm, 5000CT, non-wire-saving, 5 pole pairs, long-wire drive	Spring clips, cables
BMTI44-C09-1024-B4-P-WA0.5-SP4002	Tapered shaft ϕ9mm, 1024CT, non-wire-saving, 4 pole pairs, long-wire drive	Spring clips, cables
BMTI44-C09-2500-B4-P-WA0.5-SP4002	Tapered shaft ϕ9mm, 2500CT, non-wire-saving, 4 pole pairs, long-wire drive	Spring clips, cables
BMTI44-C09-5000-B4-P-WA0.5-SP4002	Tapered shaft ϕ9mm, 5000CT, non-wire-saving, 4 pole pairs, long-wire drive	Spring clips, cables
BMTI44-C09-1024-B5-P-WA0.5-SP4002	Tapered shaft ϕ9mm, 1024CT, non-wire-saving, 5 pole pairs, long-wire drive	Spring clips, cables
BMTI44-C09-2500-B5-P-WA0.5-SP4002	Tapered shaft ϕ9mm, 2500CT, non-wire-saving, 5 pole pairs, long-wire drive	Spring clips, cables
BMTI44-C09-5000-B5-P-WA0.5-SP4002	Tapered shaft ϕ9mm, 5000CT, non-wire-saving, 5 pole pairs, long-wire drive	Spring clips, cables

Felix-Wankel-Str.1, 85221 Dachau, Germany

Tel: +49 (0) 8131 337578-0
E-mail: info@tbfsensor.de

TBF Electronic Technology GmbH (German branch)

Building 6, Dazu Enterprise Bay,
8th yard of Liangshuihe 2nd street, BDA P.R.China

Tel: +86 10-67948976 67948916
Fax: +86 10-67948979

Beijing Tebeifu Electronic Technology Co., Ltd.

www.tbfsensor.com

For more customizable products, please contact us.